HCD-C50/C50U

SERVICE MANUAL

US Model
HCD-C50U
Canadian Model
AEP Model
UK Model
E Model
Australian Model
PX Model
HCD-C50

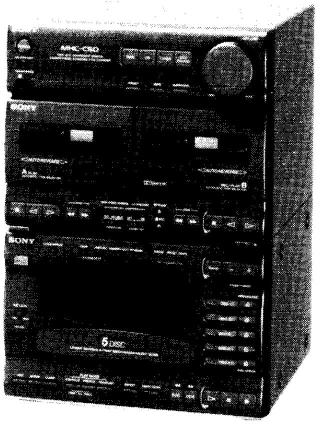

Photo : HCD-C50 (AEP model)

HCD-C50/C50U are the CD player and stereo deck receiver in FH-C5X and MHC-C50.

Dolby noise reduction manufactured under license from Dolby Laboratories Licensing Corporation. "DOLBY" and the double-D symbol ▯▯ are trademarks of Dolby Laboratories Licensing Corporation.

CD SECTION	Model Name Using Similar Mechanism		CDP-H3750
	CD Mechanism Type		CDM23-5BD3
	Base Unit Type		BU-5BD3
TAPE DECK SECTION (C50)	Model Name Using Similar Mechanism		HCD-H61/H61M
	Tape Transport Mechanism Type	DECK-A	TCM-190RA12A
		DECK-B	TCM-190RB22A
TAPE DECK SECTION (C50U)	Model Name Using Similar Mechanism		HCD-H51/H51M
	Tape Transport Mechanism Type		TCM-210W3

SPECIFICATIONS

Tuner/Amplifier/CD player/Cassette deck (HCD-C50)

Tuner Section

System FM stereo, AM superheterodyne tuner

FM tuner section

Tuning range
- EE model : 65 — 74 MHz
  87.5 — 108 MHz
- Except EE model : 87.5 — 108 MHz

Antenna terminals: 75 ohms unbalanced

Intermediate frequency: 10.7 MHz

AM tuner section

Tuning range
- G model : AM: 531 — 1,602 kHz
- IT model : AM: 522 — 1,611 kHz
- AEP, UK, EE model : MW: 531 — 1,602 kHz
  LW: 153 — 279 kHz
- US, CND model : 531 — 1,710 kHz (at 9kHz step)
  530 — 1,710 kHz (at 10kHz step)
- E, EA, AUS, SP, PX model : MW 531 – 1,602 kHz (at 9 kHz step)
  MW 530 – 1,710kHz (at 10kHz step)
  SW 5.95 – 17.9MHz

Antenna: AM loop antenna, External antenna terminals

Intermediate frequency: 450 kHz

— Continued on next page —

COMPACT DISC DECK RECEIVER

SONY®

MICROFILM

Amplifier Section

AEP, UK, EE, G, IT model :

Continuous RMS power output

30 + 30 watts (6 ohms at 1 kHz, DIN)
36 + 36 watts (6 ohms at 1 kHz, 5% THD)

Music power output — 40 + 40 watts (6 ohms at 1 kHz, 10% THD)

Inputs — MIX MIC (minijack): sensitivity 1 mV, impedance 10 kilohms
PHONO IN (phono jacks): sensitivity 5 mV, impedance 47 kilohms
MD IN (phono jacks): sensitivity 250 mV, impedance 47 kilohms

Outputs — HEADPHONES (stereo minijack): accepts headphones of 8 ohms or more
SPEAKER: accepts speakers of 6 to 16 ohms
MD OUT (phono jacks): voltage 250 mV, impedance 2 kilohms

US, CND model :

Continuous RMS power output

25 + 25 watts (6 ohms at 80 Hz — 20 kHz, 1% THD)

Inputs — VIDEO IN (phono jacks): sensitivity 250 mV, impedance 47 kilohms
MD IN (phono jacks): sensitivity 250 mV, impedance 47 kilohms

Outputs — HEADPHONES (stereo minijack): accepts headphones of 8 ohms or more
SPEAKER: accepts speakers of 6 to 16 ohms
VIDEO OUT (phono jacks): voltage 250 mV, impedance 1 kilohm
MD OUT (phono jacks): voltage 250 mV, impedance 1 kilohm

E, EA, AUS, SP, PX model :

Continuous RMS power output :
36 + 36 watta (6 ohms at 1kHz, 5% THD)

Peak music power output : 300 watts

Inputs — MIX MIC (minijack): sensitivity 1 mV, impedance 10 kilohms
MD/VIDEO IN (phono jacks): sensitivity 250 mV, impedance 47 kilohms

Outputs — HEADPHONES (stereo minijack): accepts headphones of 8 ohms or more
SPEAKER: accepts speakers of 6 to 16 ohms
MD/VIDEO OUT: voltage 250 mV, impedance 2 kilohms

Cassette Deck Section

Recording system — 4-track 2-channel stereo

Frequency response (DOLBY NR OFF)
40 — 13,000 Hz (±3 dB), using TYPE I cassette (Sony HF-S)
40 — 14,000 Hz (±3 dB), using TYPE II cassette (Sony UX-S)

Wow and flutter — 0.1% WRMS ±0.3% (DIN)

CD player Section

System — Compact disc digital audio system
Laser — Semiconductor laser
Wavelength — 780 — 790 nm

General

Desitination	Power requirements	Power consumption
AEP, EE, G, IT model	220 — 230 V AC, 50/60Hz	100W
UK model	240 V AC, 50Hz	100W
AUS model		
E, EA, SP, PX model	110 —120/ 220 —240 V AC, adjustable, 50/60Hz	100W
US model	120V AC, 60Hz	80W
CND model		90W

Dimensions — Approx. 225 x 330 x 320 mm ($8^7/_8$ x 13 x $12^5/_8$ in.) (w/h/d) incl. projecting parts and controls

Weight — Except SP model : Approx. 8.9 kg
SP model : Approx. 9.1 kg

Supplied accessories — Remote Commander (1)
Sony SUM-3 (NS) batteries (2)
AM loop antenna (1)
FM antenna (1)
Speaker cord (2) (Except AEP, UK, EE, G, IT model)

Note

EE : East European model
EA : Saudi Arabia model
G : German model
IT : Italian model
SP : Singapore model
CND : Canadian model
AUS : Australian model

SAFETY-RELATED COMPONENT WARNING!!

COMPONENTS IDENTIFIED BY MARK ⚠ OR DOTTED LINE WITH MARK ⚠ ON THE SCHEMATIC DIAGRAMS AND IN THE PARTS LIST ARE CRITICAL TO SAFE OPERATION. REPLACE THESE COMPONENTS WITH SONY PARTS WHOSE PART NUMBERS APPEAR AS SHOWN IN THIS MANUAL OR IN SUPPLEMENTS PUBLISHED BY SONY.

ATTENTION AU COMPOSANT AYANT RAPPORT À LA SÉCURITÉ!

LES COMPOSANTS IDENTIFIÉS PAR UNE MARQUE ⚠ SUR LES DIAGRAMMES SCHÉMATIQUES ET LA LISTE DES PIÈCES SONT CRITIQUES POUR LA SÉCURITÉ DE FONCTIONNEMENT. NE REMPLACER CES COMPOSANTS QUE PAR DES PIÈCES SONY DONT LES NUMÉROS SONT DONNÉS DANS CE MANUEL OU DANS LES SUPPLÉMENTS PUBLIÉS PAR SONY.

MODEL IDENTIFICATION
— SPECIFICATION LABEL —

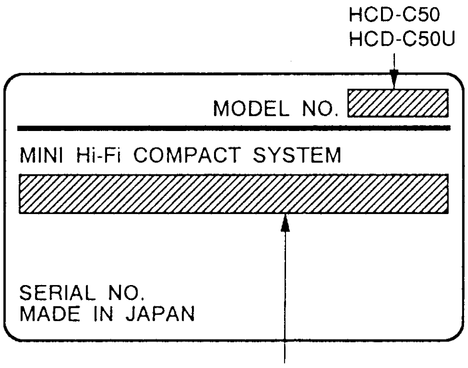

AEP, East European, German,
Italian model : AC 220 — 230V ~, 50/60Hz, 100W
UK model : AC 240V, 50Hz, 100W

E, Saudi Arabia, Singapore
PX model : AC 110 — 120, 220 — 240V, 50/60Hz, 100W
Australian model : AC 240V, 50Hz, 100W
US model : 120V, 60Hz, 80W
Canadian model : 120V, 60Hz, 90W

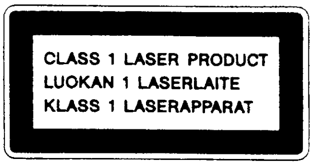

This appliance is classified as a CLASS 1 LASER product. The CLASS 1 LASER PRODUCT MARKING is located on the rear exterior.

The following caution label is located inside the unit.

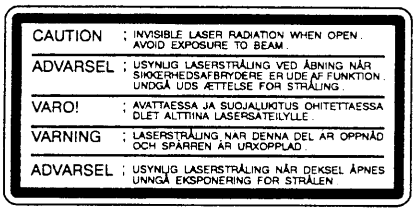

SAFETY CHECK-OUT

After correcting the original service problem, perform the following safety checks before releasing the set to the customer:

Check the antenna terminals, metal trim, "metallized" knobs, screws, and all other exposed metal parts for AC leakage. Check leakage as described below.

LEAKAGE TEST

The AC leakage from any exposed metal part to earth ground and from all exposed metal parts to any exposed metal part having a return to chassis, must not exceed 0.5 mA (500 microampers). Leakage current can be measured by any one of three methods.

1. A commercial leakage tester, such as the Simpson 229 or RCA WT-540A. Follow the manufacturers' instructions to use these instruments.
2. A battery-operated AC milliammeter. The Data Precision 245 digital multimeter is suitable for this job.
3. Measuring the voltage drop across a resistor by means of a VOM or battery-operated AC voltmeter. The "limit" indication is 0.75 V, so analog meters must have an accurate low-voltage scale. The Simpson 250 and Sanwa SH-63Trd are examples of a passive VOM that is suitable. Nearly all battery operated digital multimeters that have a 2V AC range are suitable. (See Fig. A)

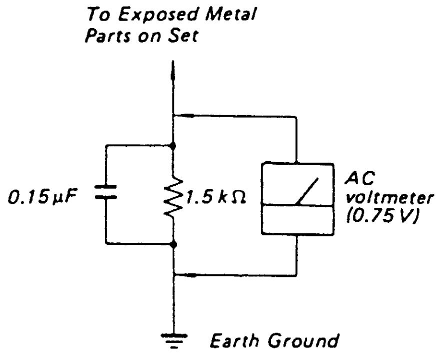

Fig. A. Using an AC voltmeter to check AC leakage.

TABLE OF CONTENTS

Section	Title	Page
SECTION 1.	SERVICE NOTE	5
SECTION 2.	GENERAL	
	Parts Identification	9
SECTION 3.	DISASSEMBLY	
3-1.	Case Removal	11
3-2.	Back Panel Removal	11
3-3.	Main Board Removal	12
3-4.	Power Supply Unit Removal	12
3-5.	TC Mechanism Deck Removal	13
3-6.	CD Mechanism Deck Removal	13
SECTION 4.	MECHANICAL ADJUSTMENTS	14
SECTION 5.	ELECTRICAL ADJUSTMENTS	
	Deck Section	14
	CD Section	18
	Tuner Section	20
SECTION 6.	IC PIN FUNCTIONS	
	• IC202 Deck Controller (M50964-260FP)	22
	• IC361 Mechanism Controller (M3747M4-220SP)	24
	• IC450 CD Mechanism Controller (µPD75516GF-461-3B9)	25
	• IC501 Display Controller (µPD78042-GF-033-3B9)	28
	• IC601 CD Master Controller (µPD75517GF-209-3B9)	30
SECTION 7.	DIAGRAMS	
7-1.	Circuit Boards Location	32
7-2.	Block Diagram — Main Section —	33
7-3.	Block Diagram — CD/Display Section —	36
7-4.	Block Diagram — Deck (HCD-C50) Section —	39
7-5.	Block Diagram — Deck (HCD-C50U) Section —	41
7-6.	Printed Wiring Board • Main Section (HCD-C50 : AEP, UK, G, IT, EE)	43
7-7.	Schematic Diagram • Main Section (HCD-C50 : AEP, UK, G, IT, EE)	47
7-8.	Schematic Diagram • Main Section (HCD-C50 : CND, E, EA, AUS, SP, PX/C50U)	52
7-9.	Printed Wiring Board • Main Section (HCD-C50 : CND, E, EA, AUS, SP, PX/C50U)	57
7-10.	Printed Wiring Board • CD Section	61
7-11.	Schematic Diagram • CD Section	65
7-12.	Schematic Diagram • Display Section	70
7-13.	Printed Wiring Board • Display Section	75
7-14.	Printed Wiring Board • Deck Section (HCD-C50)	80
7-15.	Schematic Diagram • Deck Section (HCD-C50)	85
7-16.	Schematic Diagram • Deck Section (HCD-C50U)	89
7-17.	Printed Wiring Board • Deck Section (HCD-C50U)	93
7-18.	Semiconductor Lead Layouts	97
SECTION 8.	EXPLODED VIEWS	
8-1.	Case, Power Board Section	99
8-2.	Front Panel, PC Board Section	100
8-3.	Cassette Holder Section	101
8-4.	Mechanism Deck Section 1 (HCD-C50) (Deck A : TCM-190RA12A/ DECK B : TCM-190RB22A)	102
8-5.	Mechanism Deck Section 2 (HCD-C50) (Deck A : TCM-190RA12A/ DECK B : TCM-190RB22A)	103
8-6.	Mechanism Deck Section 3 (HCD-C50U) (TCM-210W3)	104
8-7.	Mechanism Deck Section 4 (HCD-C50U) (TCM-210W3)	105
8-8.	CD Mechanism Section 1 (CDM23B-5BD3)	106
8-9.	CD Mechanism Section 2 (CDM23B-5BD3)	107
8-10.	Optical Pick-up Section (BU-5BD3)	108
SECTION 9.	ELECTRICAL PARTS LIST	109

SECTION 1
SERVICING NOTE

NOTES ON HANDLING THE OPTICAL PICK-UP BLOCK OR BASE UNIT

The laser diode in the optical pick-up block may suffer electrostatic breakdown because of the potential difference generated by the charged electrostatic load, etc. on clothing and the human body.
During repair, pay attention to electrostatic breakdown and also use the procedure in the printed matter which is included in the repair parts.
The flexible board is easily damaged and should be handled with care.

NOTES ON LASER DIODE EMISSION CHECK

The laser beam on this model is concentrated so as to be focused on the disc reflective surface by the objective lens in the optical pick-up block. Therefore, when checking the laser diode emission, observe more than 30 cm away from the objective lens.

LASER DIODE AND FOCUS SEARCH OPERATION CHECK

1. Make POWER switch on with no disc inserted and disc table closed.
2. Confirm that the following operation is performed while observing the objective lens.

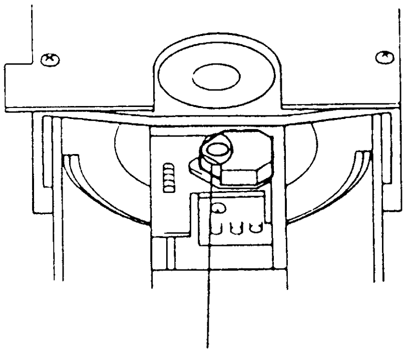

❶ Confirm that laser beam is spread.
❷ Up and downmotion of the objective lens. (3 times)

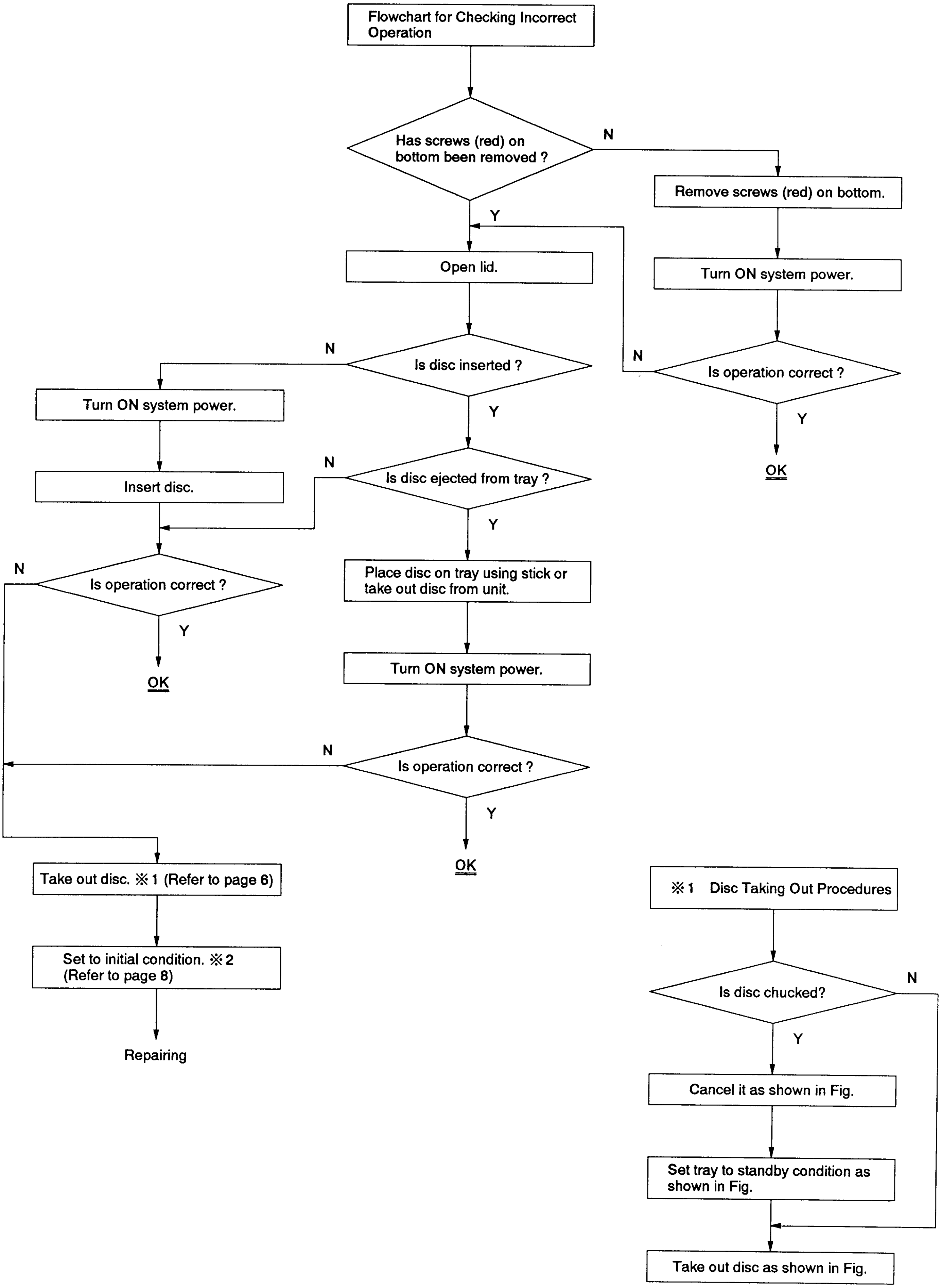
Flowchart for Checking Incorrect Operation
Has screws (red) on bottom been removed ?
N
Y
Remove screws (red) on bottom.
Turn ON system power.
Is operation correct ?
N
Y
OK
Open lid.
Is disc inserted ?
N
Y
Turn ON system power.
Insert disc.
Is disc ejected from tray ?
N
Y
Is operation correct ?
N
Y
OK
Place disc on tray using stick or take out disc from unit.
Turn ON system power.
Is operation correct ?
N
Y
OK
Take out disc. ※1 (Refer to page 6)
Set to initial condition. ※2 (Refer to page 8)
Repairing
※1 Disc Taking Out Procedures
Is disc chucked?
N
Y
Cancel it as shown in Fig.
Set tray to standby condition as shown in Fig.
Take out disc as shown in Fig.

Disc Taking Out Procedures

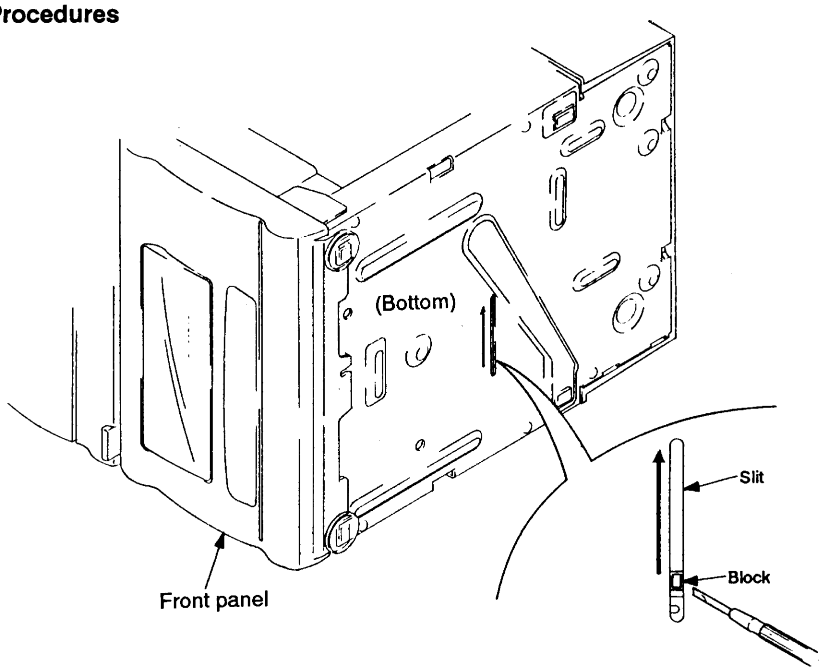

1) Insert a thin stick into the hollow of the white block and move it in the arrow direction.
(When a disc is chucked, handle the unit as follows to avoid disc removal.)

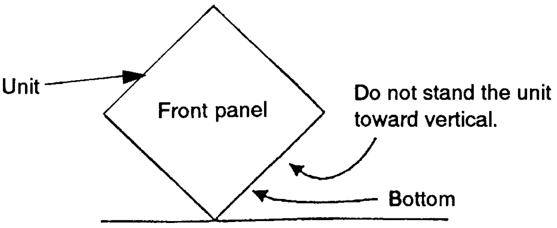

2) Turn the pulley A in the arrow ◯ direction and make sure that the disc tray moves in the arrow ⇦ direction. And further turn the pulley A until the tray aligns with other trays.

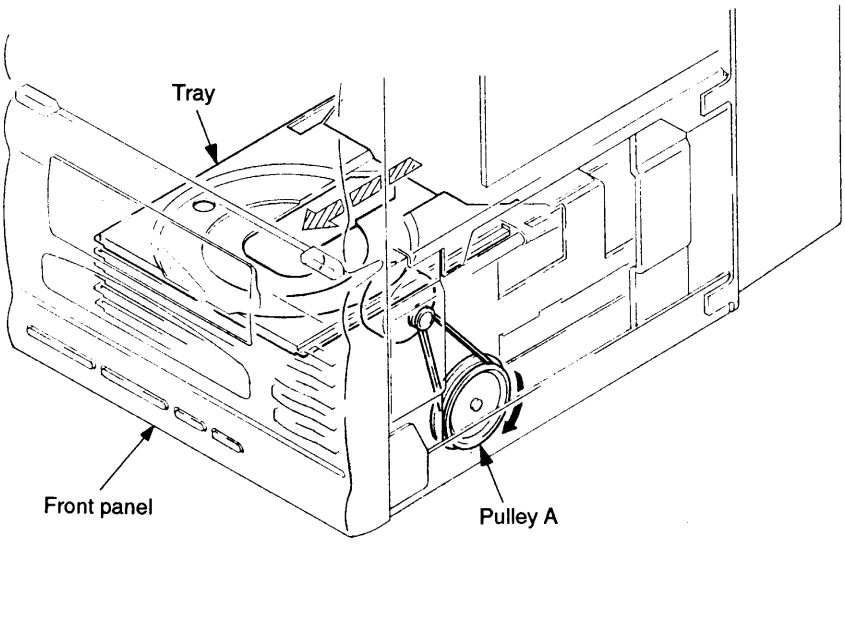

3) Open the front panel lid. Turn the pulley B to allow the stock, which has the disc tray, to go up and down until the disc inserted tray aligns with the front panel lid position .

4) Turn the pulley A in the arrow ◯ direction to allow the disc inserted tray to be ejected. Take out the disc and turn the pulley A in the reverse direction to allow the disc inserted tray to align with other trays.

In case two or more trays have discs, repeat step 3) and 4).

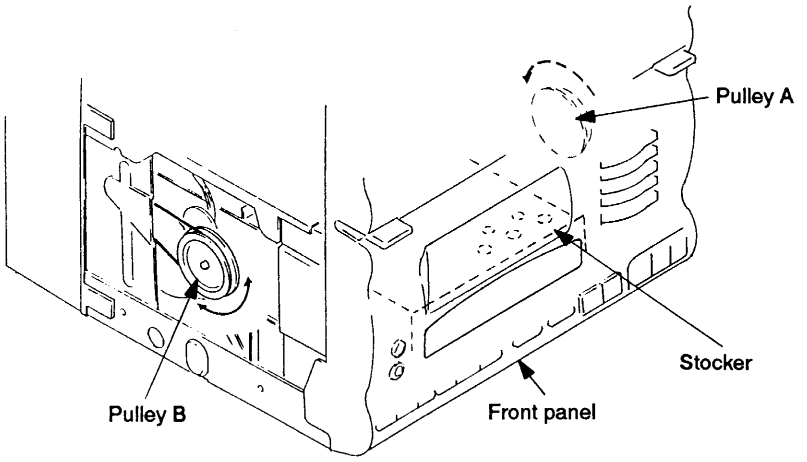

※2 Initial setting procedures

1) In case turning ON the system power supply allows the mechanism to work:
Fist, make sure that all discs have been taken out.

Open the disc No.1.
↓
Turn OFF the system power supply.
↓
Make sure that "OFF" appears on the CD display.
↓
Blinking and character disappearing indicates setting completion.

2) In case turning ON the system power supply does not allow the mechanism to work:
Move the disc tray as shown in Fig.

Initial Setting Procedures

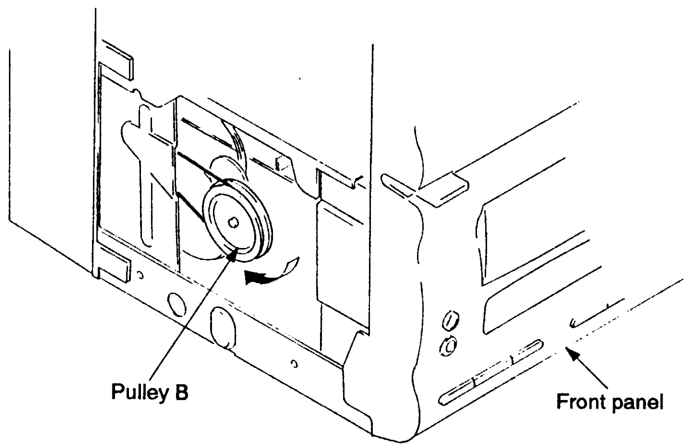

※ Make sure that all trays are in the correct positions. Turn the pulley B in the arrow direction until it stops.

SECTION 2
GENERAL

This section is extracted from instruction manual.

Parts Identification

A

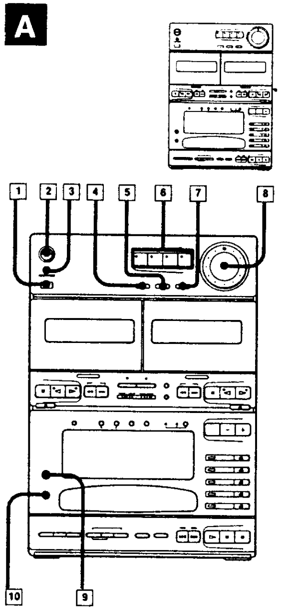

Amplifier Section A

1. Remote control sensor
2. POWER ON/STANDBY button
3. HEADPHONES jack (stereo minijack)
4. PRESET button
5. DBFB (Dynamic Bass Feedback) button
6. Function buttons and indicators
   - TAPE
   - CD
   - TUNER
   - MD/PHONO
7. SURROUND button
8. VOLUME control
9. MIC (microphone) LEVEL control
10. MIX MIC (microphone) input jack (minijack)

B

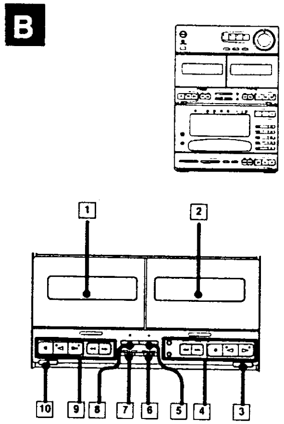

Cassette Deck Section B

1. Cassette holder (Deck A)
2. Cassette holder (Deck B)
3. ≙ Eject button (Deck B)
4. Tape operation buttons (for Deck B)
   - ■: Stop button
   - ▷: Forward play button and indicator
   - ◁: Reverse play button and indicator
   - AMS ◀◀▶▶: Fast winding buttons
   - ❙❙ PAUSE: Pause button and indicator
   - ● REC: Recording button and indicator
5. CD SYNCHRO button and indicator
6. DOLBY NR (Dolby Noise Reduction) selector
7. DIRECTION mode selector
8. HIGH SPEED DUBBING button and indicator
9. Tape operation buttons (for Deck A)
   - ■: Stop button
   - ▷: Forward play button and indicator
   - ◁: Reverse play button and indicator
   - AMS ◀◀▶▶: Fast winding buttons
10. ≙ Eject button (Deck A)

C

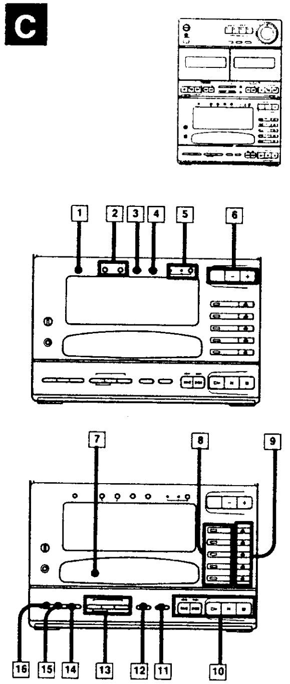

Tuner/CD Player Section C

Tuner

1. CLOCK DISPLAY button
2. CLOCK SET buttons
   - TIMER button
   - TIMER REC button
3. MEMORY/NEXT button
4. ST/MONO button
5. MODE button
   - TUNING indicator
   - PRESET indicator
6. PRESET/TIMER buttons
   - BAND button
   - –/+ buttons

CD Player

7. Disc tray door
8. DISC 1 — 5 selectors and disc tray indicators
9. OPEN/CLOSE ≙ buttons
10. CD operation buttons
    - ■: Stop
    - ❙❙: Pause
    - ▷: Play
    - ⏮◀◀ ▶▶⏭: Manual search (When kept pressed)/Automatic Music Sensor (When pressed)
11. MUSIC SCAN button
12. REPEAT button
13. PLAY MODE buttons
    - CONTINUE button
    - SHUFFLE button
    - PROGRAM button
14. CLEAR button
15. CHECK button
16. EDIT button

D

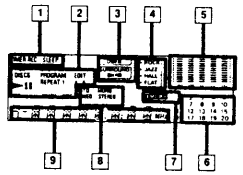

Display Window D

1. Timer indications
2. CD playing/editing mode indications
3. DBFB/SURROUND on/off indications
4. Sound Field Coordinator display
   - ROCK
   - JAZZ
   - HALL
   - FLAT
5. Spectrum analyzer display
6. CD selection numbers display
   Preset station number display
7. MEMORY indication
8. Tuner indication
9. Preset menu/Tuner/Timer/CD player display

E

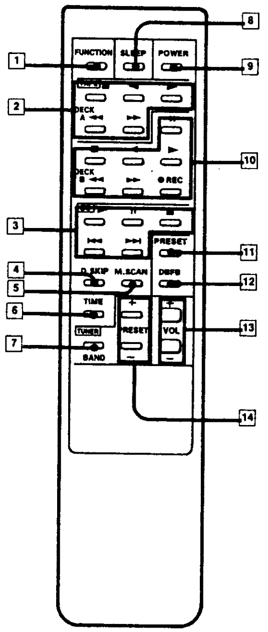

Remote Commander E

1. FUNCTION button
2. Cassette deck operation buttons (for Deck A)
3. CD operation buttons
4. D. SKIP button
5. M. SCAN button
6. TIME button
7. BAND button
8. SLEEP button
9. POWER button
10. Cassette deck operation buttons (for Deck B)
11. PRESET button
12. DBFB button
13. VOL +/– buttons
14. PRESET +/– buttons

Parts Identification

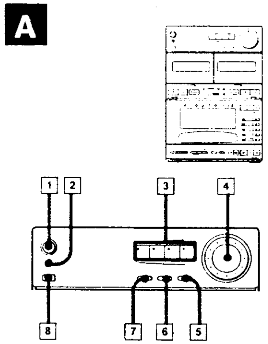

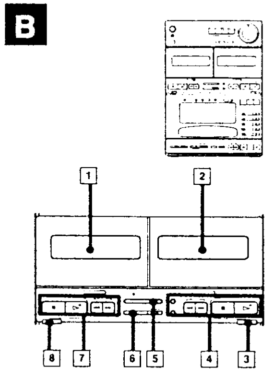

4 (the U.S. model) (the Canadian model)

5 (the U.S. model) (the Canadian model)

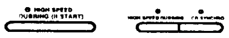

6 (the U.S. model) (the Canadian model)

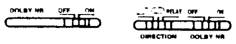

7 (the U.S. model) (the Canadian model)

Refer to the pages indicated in ( ) for use of the buttons.

Amplifier Section A

1 POWER ON/STANDBY button
2 HEADPHONES jack (stereo minijack)
3 Function buttons and indicators
  MD/VIDEO
  TAPE
  CD
  TUNER
4 VOLUME control
5 SURROUND button
6 DBFB (Dynamic Bass Feedback) button

7 PRESET button
8 Remote control sensor

Cassette Deck Section B

1 Cassette holder (Deck A)
2 Cassette holder (Deck B)
3 ≜ Eject button (Deck B)
4 Tape operation buttons (for Deck B)
  ■: Stop button
  ▷: Play button and indicator
  AMS ◀◀▶▶: Fast winding buttons
  ❚❚ PAUSE: Pause button and indicator
  ●REC: Recording button and indicator
  (For the Canadian model only)
  ◁: Reverse play button and indicator
5 HIGH SPEED DUBBING button and indicator
  (For the Canadian model only)
  CD SYNCHRO button and indicator
6 DOLBY NR (Dolby Noise Reduction) selector
  (For the Canadian model only)
  DIRECTION mode selector
7 Tape operation buttons (for Deck A)
  ■: Stop button
  ▷: Play button and indicator
  AMS ◀◀▶▶ Fast winding buttons
  ❚❚ PAUSE: Pause button and indicator
  ● REC: Recording button and indicator
  (For the Canadian model only)
  ◁: Reverse play button and indicator
8 ≜ Eject button (Deck A)

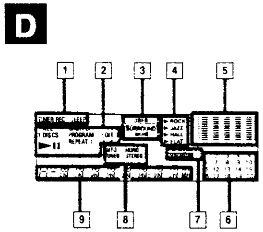

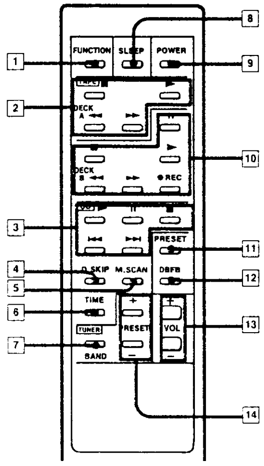

2 (the U.S. model) (the Canadian model)

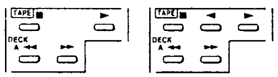

10 (the U.S. model) (the Canadian model)

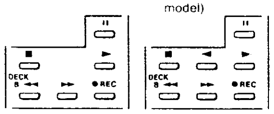

Parts Identification

Display Window D

1 Timer indications
2 CD playing/editing mode indications
3 DBFB/SURROUND on/off indications
4 Sound Field Coordinator display
  ROCK
  JAZZ
  HALL
  FLAT
5 Spectrum analyzer display
6 CD selection numbers display
  Preset station number display
7 MEMORY indication
8 Tuner indication
9 Preset menu/Tuner/Timer/CD player display

Remote Commander E

1 FUNCTION button
2 Cassette deck operation buttons (for Deck A)
3 CD operation buttons
4 D. SKIP button
5 M. SCAN button
6 TIME button
7 BAND button
8 SLEEP button
9 POWER button
10 Cassette deck operation buttons (for Deck B)
11 PRESET button
12 DBFB button
13 VOL +/– buttons
14 PRESET +/– buttons

SECTION 3
DISASSEMBLY

3-1. CASE REMOVAL

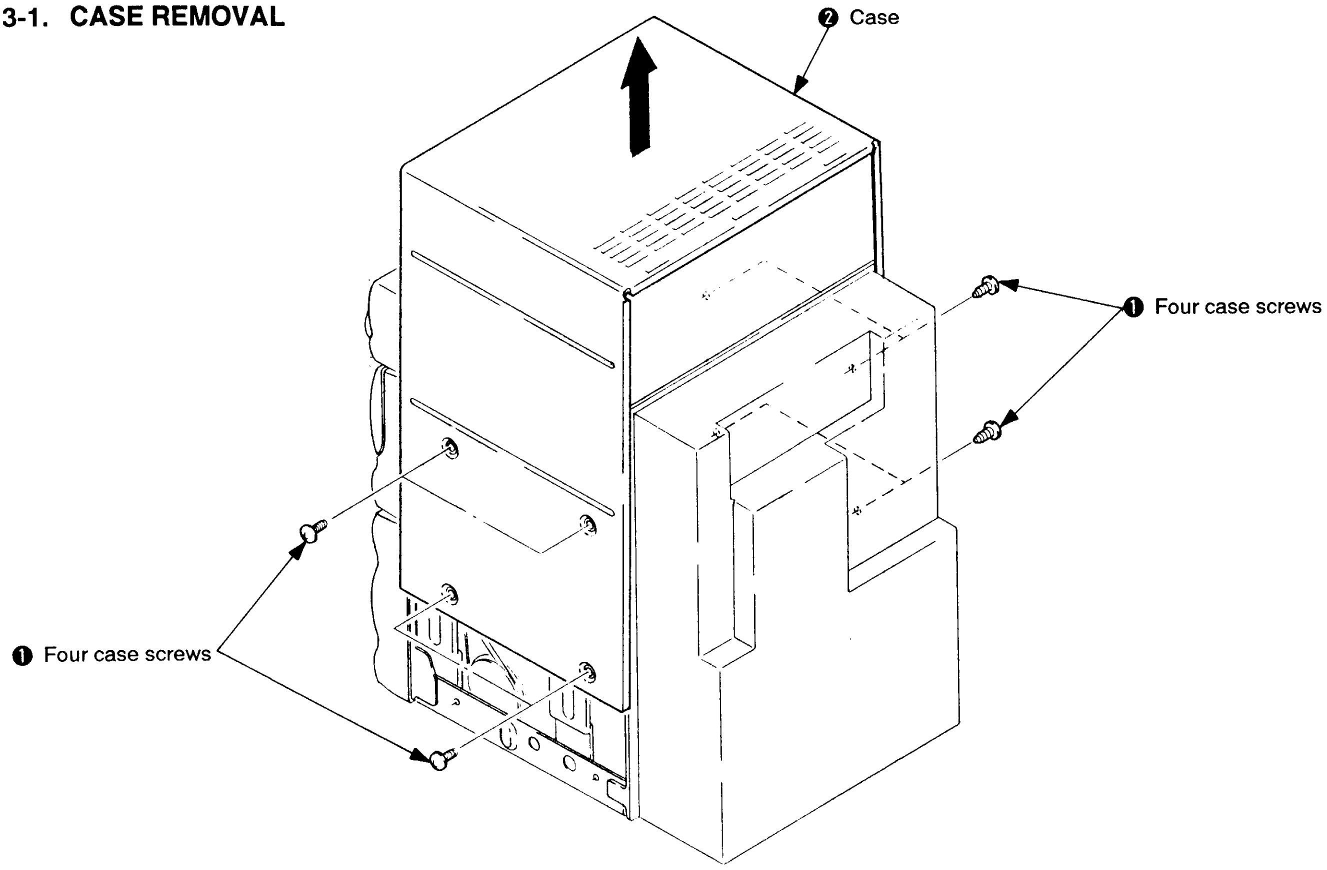

3-2. BACK PANEL REMOVAL

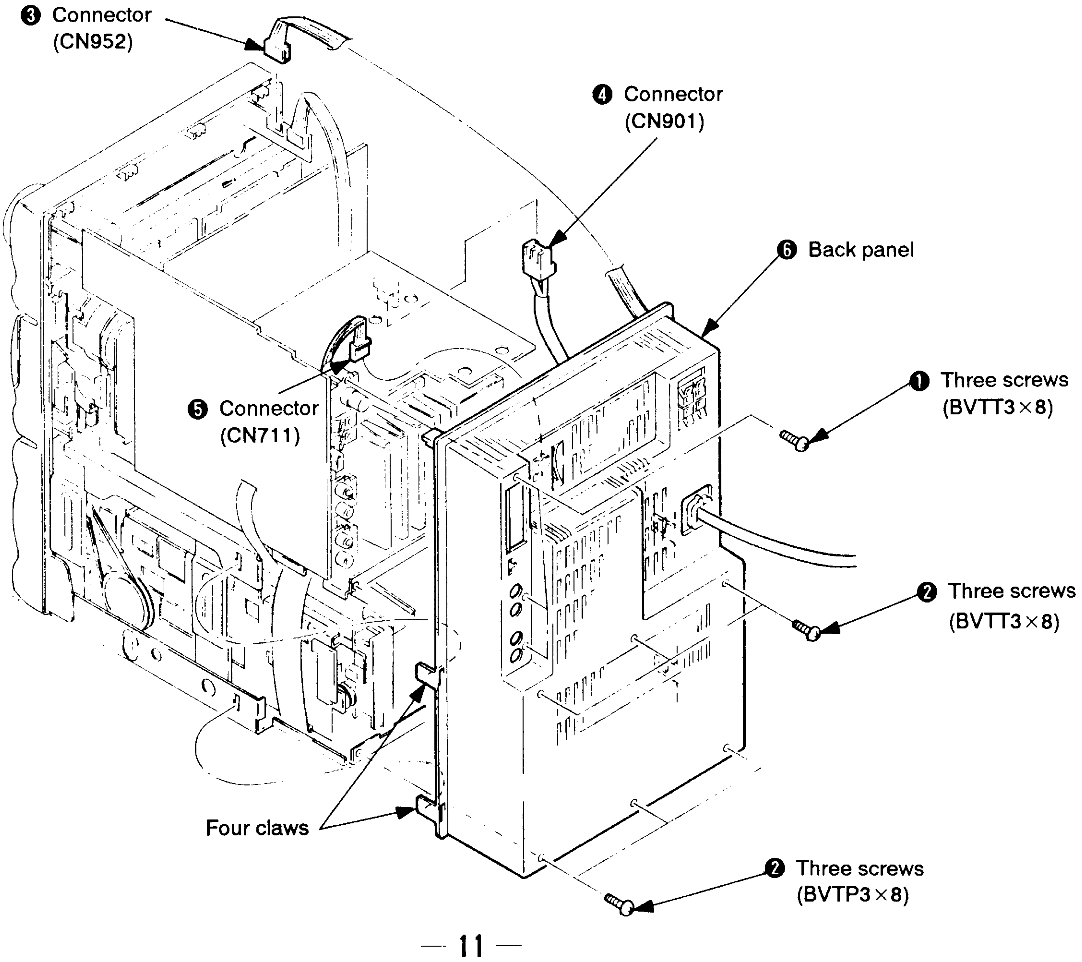

3-3. MAIN BOARD REMOVAL

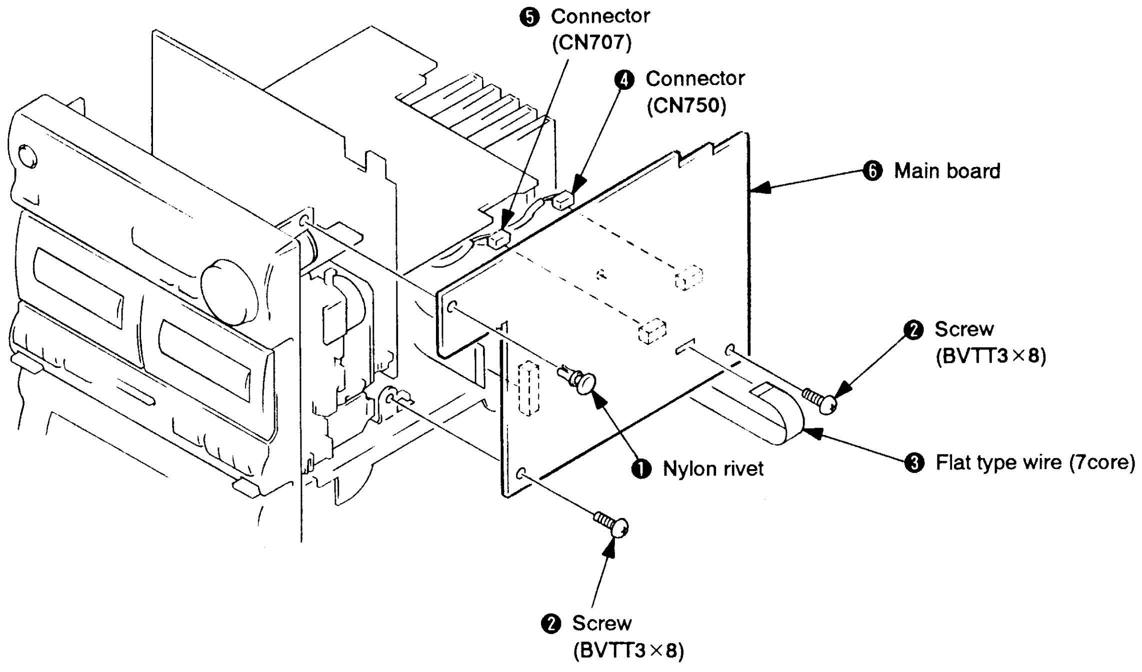

3-4. POWER SUPPLY UNIT REMOVAL

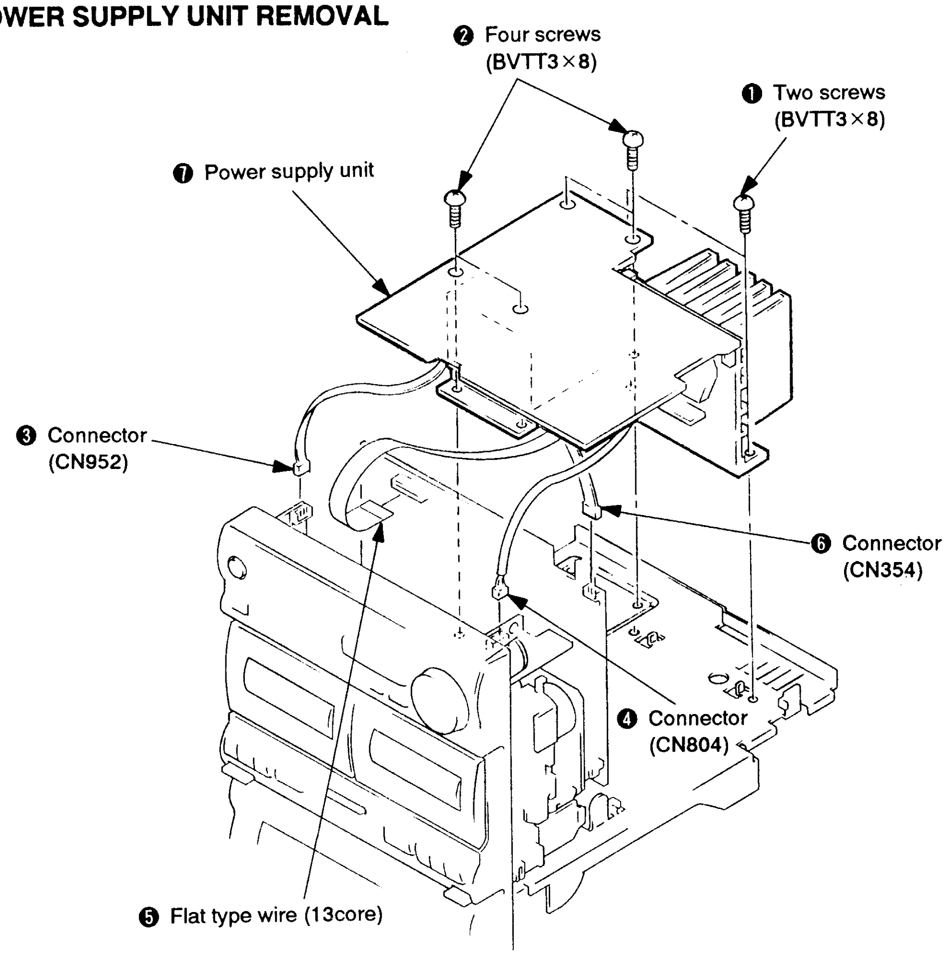

3-5. TC MECHANISM DECK REMOVAL

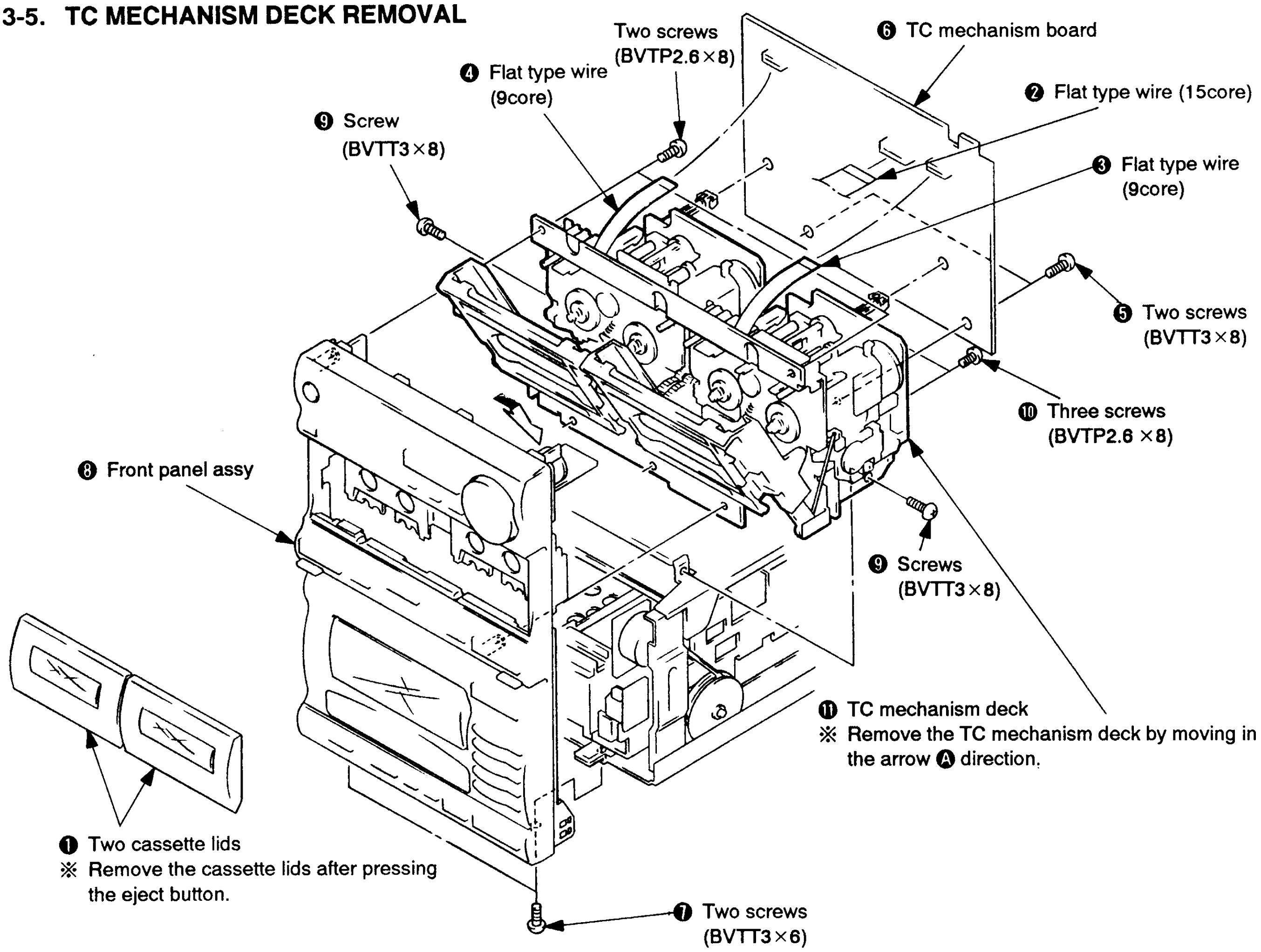

3-6. CD MECHANISM DECK REMOVAL

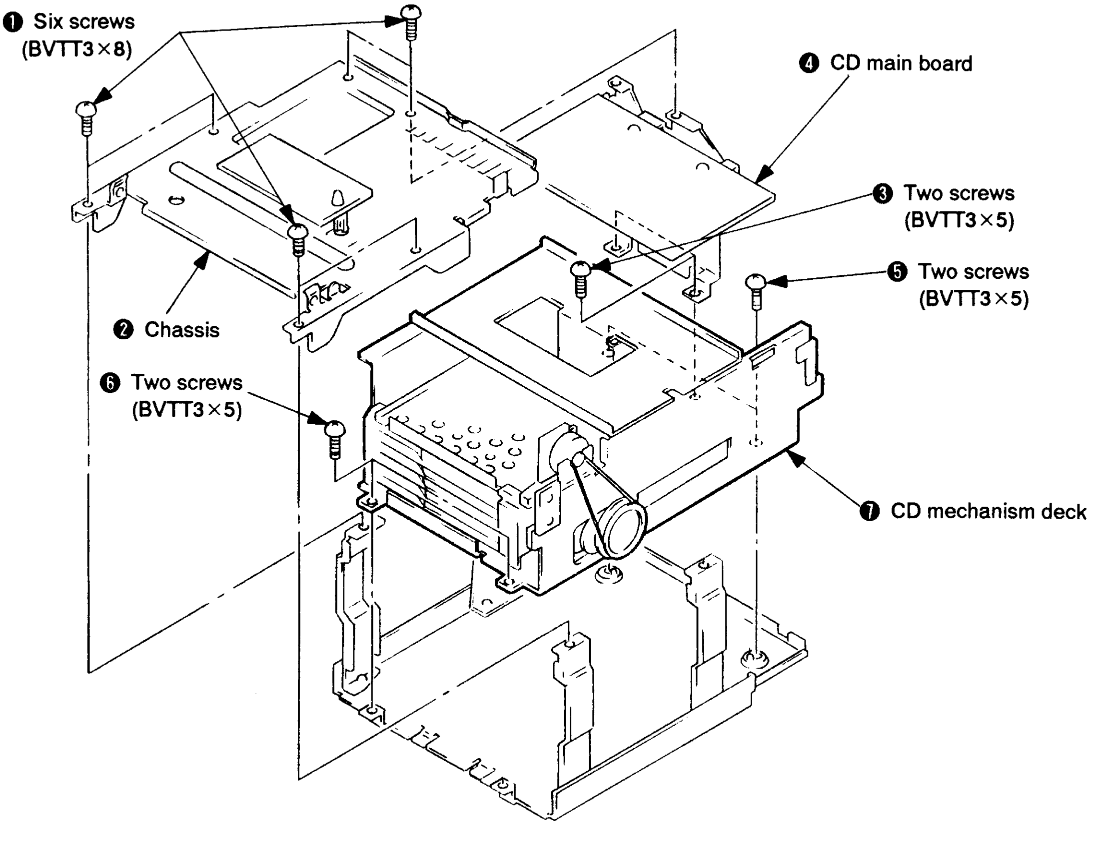

SECTION 4
MECHANICAL ADJUSTMENTS

PRECAUTION

1. Clean the following parts with a denatured alcohol-moistened swab:
   record/playback head — pinch roller
   erase head — rubber belt
   capstan — idler
2. Demagnetize the record/playback head with a head demagnetizer.
3. Do not use a magnetized screwdriver for the adjustment.
4. After the adjustments, apply suitable locking compound to the parts adjusted.
5. The adjustment should be performed with the rated power supply voltage unless otherwise noted.

• Torque Measurement

Torque	Torque meter	Meter reading
Forward	CQ-102C	30 to 70g • cm (0.42 to 0.97oz • inch)
Forward back tension	CQ-102C	1.5 to 5.5 g • cm (0.020 to 0.076oz • inch)
Reverse	CQ-102RC	30 to 70g • cm (0.42 to 0.97oz • inch)
Reverse back tension	CQ-102RB	1.5 to 5.5 g • cm (0.020 to 0.076oz • inch)
FF/REW	CQ-201B	60 g • cm or more (0.82oz • inch or more)

SECTION 5
ELECTRICAL ADJUSTMENTS

DECK SECTION

1. The adjustment should be performed in the publication. (Be sure to make playback adjustment at first.)
2. The adjustment and measurement should be performed for both L-CH and R-CH.
   • Switch position
   DOLBY NR switch: OFF
   Function switch: TAPE
3. Perior to electrical adjustments, short the TP1 (IC202 ⑬ PIN) to TP2 (GND) (test mode).

• Test Tape

Tape	Contents	Use
P-4-A100	10kH, −10dB	Head Azimuth Adjustment
P-4-L300	315Hz, 0dB	Level Adjustment
WS-48B	3kHz, 0dB	Tape Speed Adjustment

Record/Playback Head Azimuth Adjustment

DECK A | DECK B

Procedure:

1. Forward Playback Mode
   Reverse Playback Mode (except C50U model)

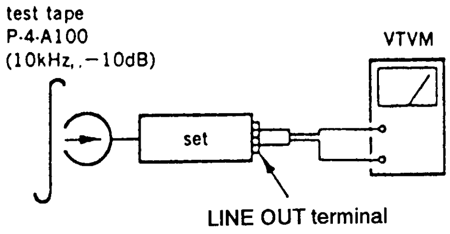

2. Turn the adjustment screw for the maximum output levels. If these levels do not match, turn the adjustment screw until both of output levels match together within 1 dB.

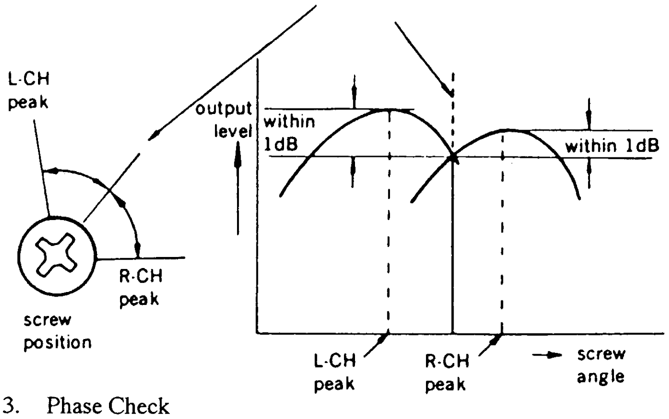

3. Phase Check

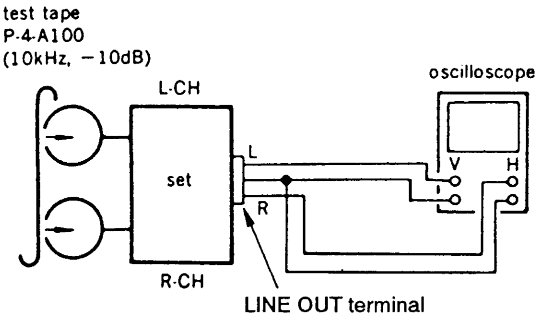

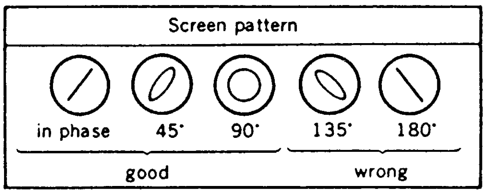

4. Change the review playback mode and repeat the steps 1 to 3.
5. After the adjustment, lock the adjustment screw with suitable locking compound.

Adjustment Location: Record/Playback head (DECK A, B)

C50 model :

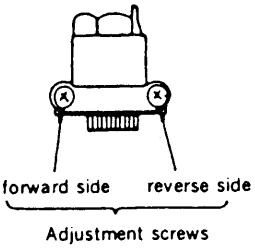

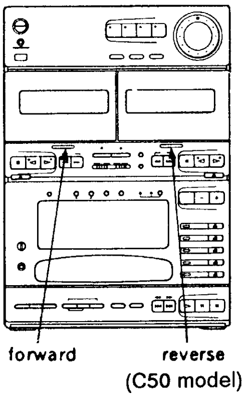

C50U model :

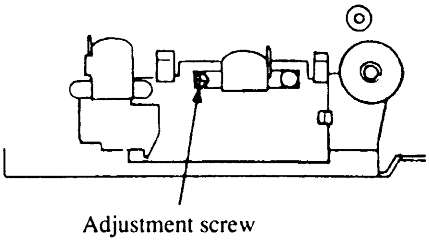

Tape Speed Adjustment DECK A DECK B (C50 model)

Procedure:

- Perform high speed adjustment before normal speed adjustment.
  Mode: playback

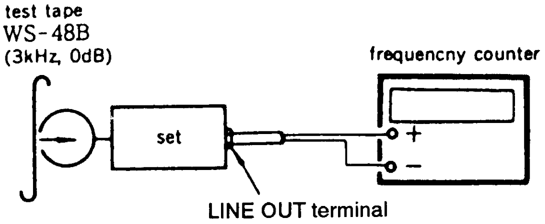

Speed	Deck	Adjustment point	Frequency counter
※High	A	RV72A	5,970 to 6,030 Hz
	B	RV72B	
Normal	A	RV71A	2,985 to 3,015 Hz
	B	RV72B	

※ Continue to press HIGH SPEED DUBBING switch (S316) in playback mode : High speed playback.

Frequency difference between the begining and the end of the tape should be within ±3%.
Frequency difference between deck A and deck B the begining of the tape should be within 1.5%.

Adjustment Location: MD-A and MD-B boards.

Tape Speed Adjustment (C50U model)

Procedure:

- Perform high speed adjustment before normal speed adjustment.
  Mode: playback

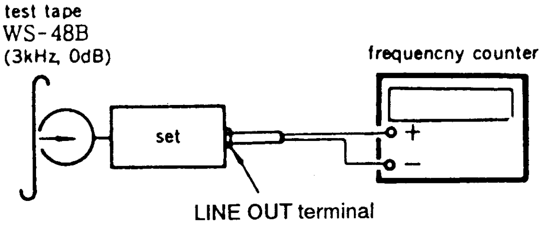

Speed	Adjustment point	Frequency counter
※High	RV351	5,970 to 6,030 Hz
Normal	RV352	2,985 to 3,015 Hz

※ Continue to press HIGH SPEED DUBBING switch (S907) in playback mode : High speed playback.

Frequency difference between the begining and the end of the tape should be within ±3%.
Frequency difference between deck A and deck B the begining of the tape should be within 1.5%.

Adjustment Location: TC MAIN (U) board.

Playback Level Adjustment DECK A DECK B

Procedure:

Mode: playback

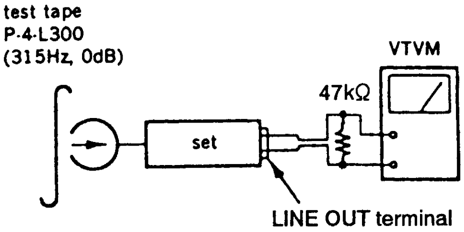

Deck A is RV11A (C50), RV201 (C50U) (L-CH) and RV21A (C50), RV251 (C50U) (R-CH), deck B is RV11B (C50), RV211 (C50U) (L-CH) and RV21B (C50), RV261 (C50U) (R-CH) so that adjustment within adjustment level as follows.

Adjustment Level:

LINE OUT level: –10dB ±0.5dB (0.23 to 0.26V)

Level Difference between Channels: within 0.5dB

Confirm the LINE OUT level does not change in playback mode while changing the mode from playback to stop several times.

Adjustment Location: MD-A and MD-B boards (C50 model)
TC MAIN (U) board (C50U model)

Record Bias Adjustment DECK B

Procedure:

1. record mode
   function switch : MD/PHONO or MD/VIDEO

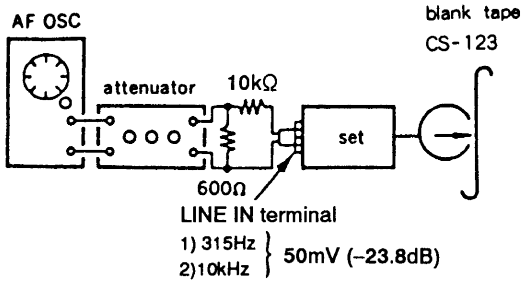

2. playback mode
   function switch : TAPE

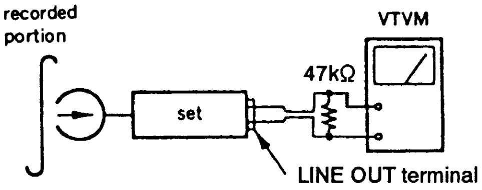

Confirm playback the signal recorded in step 1 become adjustment level as follows.

If these levels do not adjustment level, adjustment the RV12 (C50), RV221 (C50U) (L-CH) and RV22 (C50), RV271 (C50U) (R-CH) to repeat step 1 and 2.

Adjustment Level: Playback output of 10kHz to playback output of 315Hz: –0.5dB to 0.5dB.

Adjustment Location: MD-B board (C50 model)
: TC MAIN (U) board (C50U model)

Record Level Adjustment DECK B

Procedure:

1. record mode
   function switch : MD/PHONO or MD/VIDEO

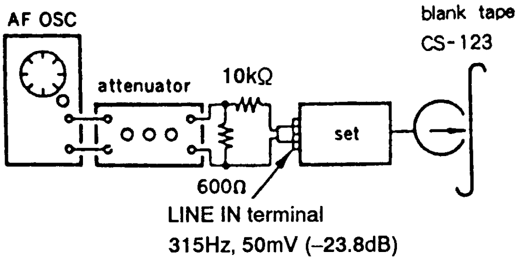

2. playback mode
   function switch : TAPE

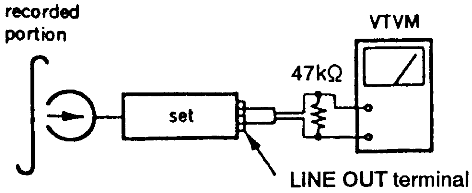

Confirm playback the signal recorded in step 1 become adjustment level as follows.

If these levels do not adjustment level, adjustment the RV301 (C50), RV231 (C50U) (L-CH) and RV201 (C50), RV281 (C50U) (R-CH) to repeat step 1 and 2.

Adjustment Level:

LINE OUT level: –23.8dB±0.5dB (47 to 53mV).

Adjustment Location: TC MAIN board (C50 model)
TC MAIN (U) board (C50U model)

Adjustment Location:

C50 model
[TC MAIN BOARD] — COMPONENT SIDE —

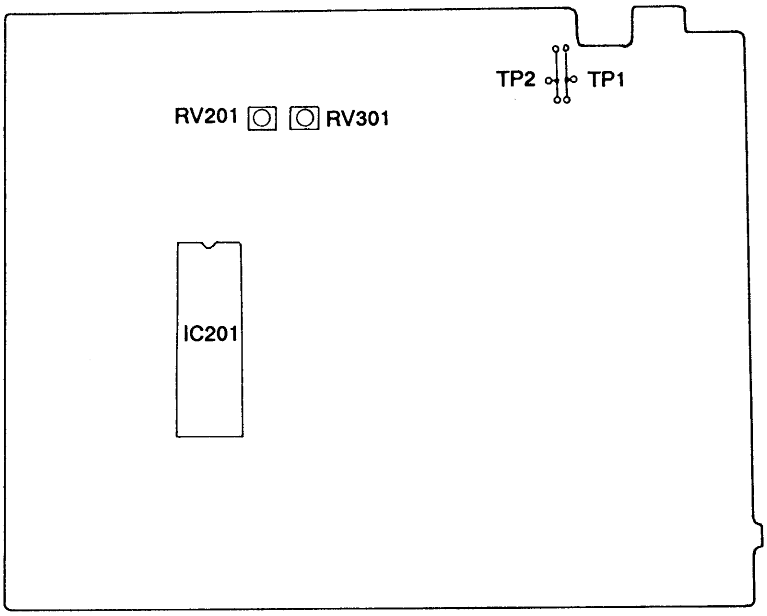

[MD-A & MD-B BOARD]
— COMPONENT SIDE —

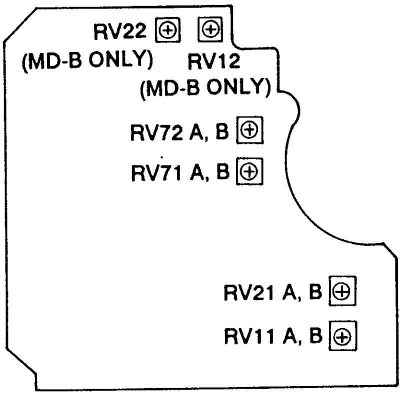

C50U model
[TC MAIN (U) BOARD] — COMPONENT SIDE —

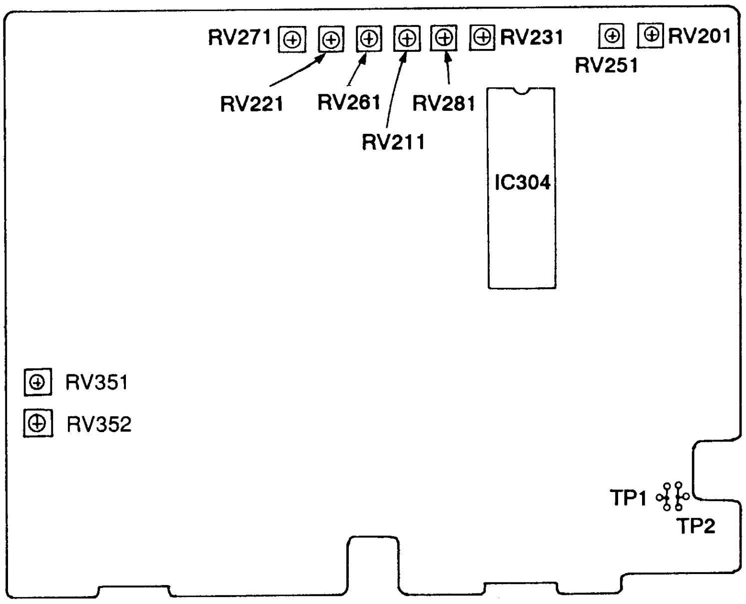

CD SECTION

Note :

1. CD Block basically constructed to operate without adjustment. Therefore, check each item in order given.
2. Use YEDS-18 disc (3-702-101-01) unless otherwise indicated.
3. Use the oscilloscope with more than 10MΩ impedance.
4. Clean an object lens by an applicator with neutral detergent when the signal level is low than specified value with the following checks.

S Curve Check

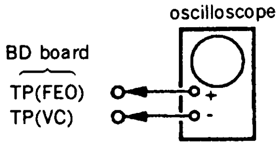

Procedure :

1. Connect oscilloscope to test point TP (FEO) on BD board.
2. Connect between test point TP (FES) and TP (VC) by lead wire.
3. Turned Power switch on and actuate the focus serch. (actuate the focus serch when disc table is moving in and out.)
4. Check the oscilloscope waveform (S curve) is symmetrical between A and B. And confirm peak to peak level within 3±1Vp-p.

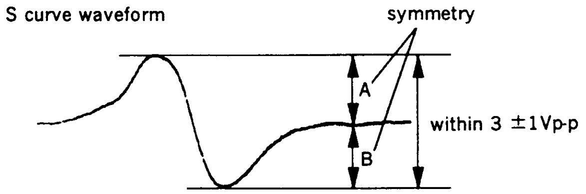

5. After check, remove the lead wire connected in step 2.

Note : • Try to mesure several times to make sure that the ratio of A : B or B : A is more than 10 : 7.

• Take sweep time as long as possible and light up the brightness to obtain best waveform.

RF Level Check

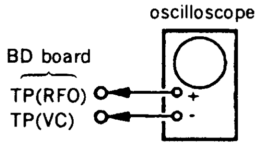

Procedure :

1. Connect oscilloscope to test point TP (RFO) on BD board.
2. Turn Power switch on.
3. Put disc (YEDS-18) in and playback.
4. Confirm that oscilloscope waveform is clear and check RF signal level is correct or not.

Note :

Clear RF signal waveform means that the shape "◇" can be clearly distinguished at the center of the waveform.

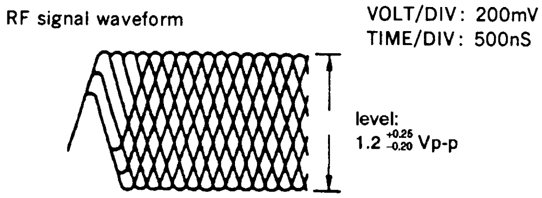

E-F Balance Check

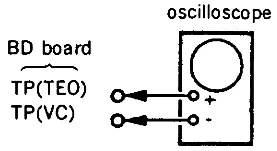

Procedure :

1. Connect test point TP (ADJ) on CD MAIN board to ground and TP (TES) to TP (VC) with lead wire.
2. Connect oscilloscope to test point TP (TEO) on BD board.
3. Turn Power switch on.
4. Put disc (YEDS-18) in and playback.
5. Confirm that the osilloscope waveform is symmetrical on the top and bottom in relation to 0Vdc, and check this level.

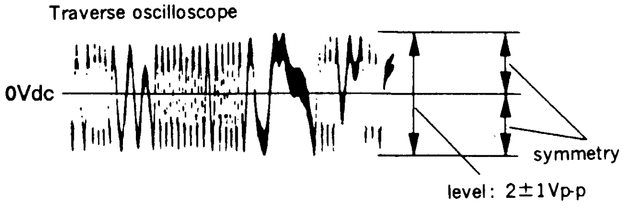

6. Remove the lead wire connected in step 1.

RF PLL Free-run Frequency Check

Procedure :

1. Connect frequency counter to test point (PLCK : IC202 ㊶ PIN with lead wire.

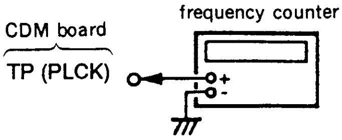

2. Turn Power switch on.
3. Confirm that reading on frequency counter is 4.3218MHz.

Focus/Tracking Gain

This gain has a margin, so even if it is slightly off.

There is no problem.

Therefore, do not perform, this adjustment.

Please note that it should be fixed to mechanical center position when you moved and do not know original position.

Adjustment Location:

[BD BOARD] — CONDUCTOR SIDE —

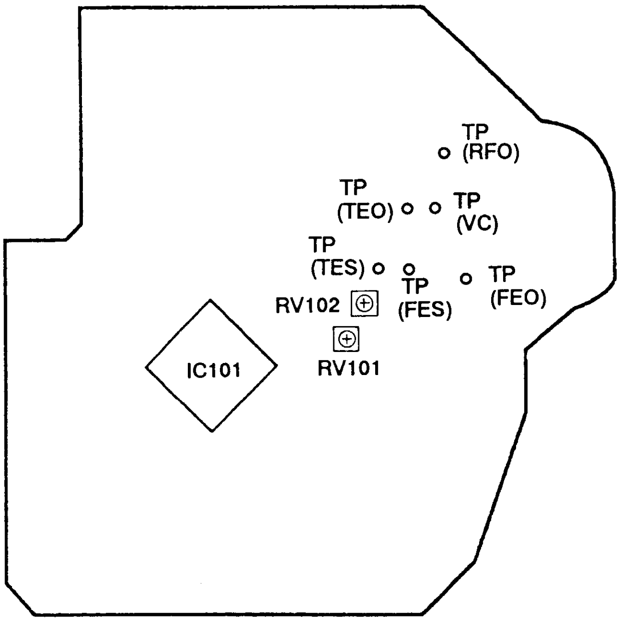

[CD MAIN BOARD] — CONDUCTOR SIDE —

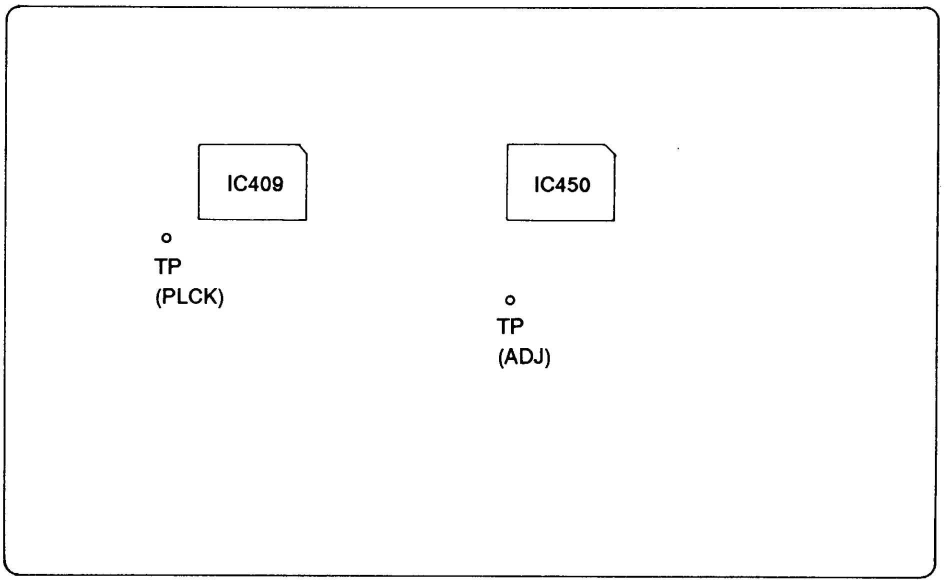

TUNER SECTION

Note : As a front-end (FE1) is difficult to repair if faulty, replace it with new one.

FM SECTION ADJUSTMENTS

Setting:

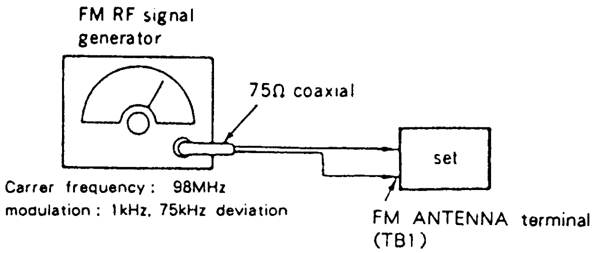

FM Tuned Indication Lighting Level Adjustment

Band: FM

Procedure:

1. Supply a 12.6μV (22dBμ) 98MHz signal from the ANTENNA terminal.
2. Tune the set to 98MHz.
3. Adjust RV51 so that the TUNED light up.
4. Confirm that TUNED light off with FM RF signal generator output level set at 19dBμ.

AM SECTION ADJUSTMENTS

(C50: E, EA, AUS, SP, PX, model)

Setting:

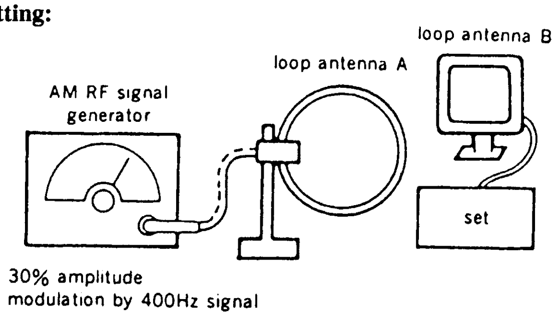

SW OSC Voltage Adjustment

Band: SW

Procedure:

1. Connect the Digital voltmeter to C32.
2. Tune the set to 5.95MHz.
3. Adjust T2 for 0.9 to 1.1Vdc reading on the Digital voltmeter.
4. Tune the set to 17.90MHz.
5. Adjust CV2 for 8.3 to 8.7Vdc reading on the Digital voltmeter.

SW Tracking Adjustment

Band: SW

Procedure:

1. Connect the VTVM to speaker terminal.
2. Adjust for a maximum reading on VTVM (TB951).

Signal generator and Set frequency	Adjustment part
7.0MHz	T1
17.0MHz	CV1

Note : EA: Saudi Arabia
AUS: Australian
SP: Singapore

Adjustment Location:

[MAIN BOARD] — COMPONENT SIDE —

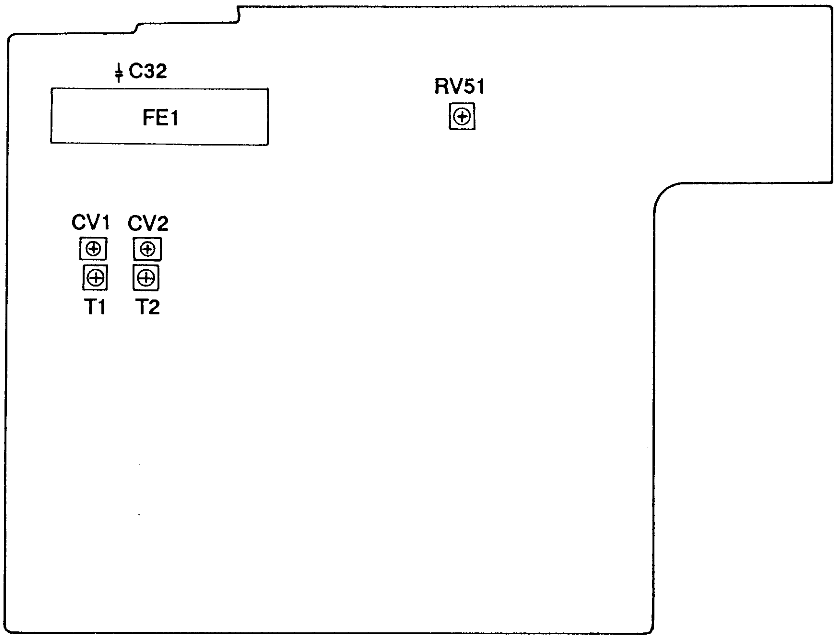

[SP TM BOARD] — COMPONENT SIDE —

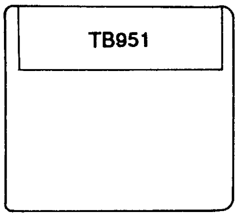

SECTION 6
IC PIN FUNCTIONS

• IC202 DECK CONTROLLER (M50964-260FP)

Pin No.	Pin Name	I/O	Symbol	Description
1	P62		G	GND
2	P61		G	GND
3	P60		G	GND
4	P47		G	GND
5	P46		G	GND
6	AN5	I	B HALF	Deck B record prevention claw A, B detection input (Analog)

Volgate (V)	1V	1.9V	2.8V	3.9V	5V
Half	ON	ON	ON	ON	OFF
E. PROOF A	OFF	ON	OFF	ON	OFF
E. PROOF B	ON	ON	OFF	OFF	OFF

Pin No.	Pin Name	I/O	Symbol	Description
7	AN4	I	KEY Y	KEY input
8	AN3	I	KEY X	

Voltage (V)	0	0.3	0.7	1.2	1.7	2.3	2.8	3.4	4.0	4.5	5.0
KEY Y	B■	B❚❚	B▶	B◀		A◀◀	A▶▶			RELAY	OFF
KEY X	A■	A▶	A◀	B◀◀	B▶▶	B●	HIGH SPEED DUBBING		CD		

Pin No.	Pin Name	I/O	Symbol	Description
9	AN2	I	AMS IN	AMS signal input
10	P41	O	L MUTE	Line mute output
11	P40	O	$\overline{\text{R MUTE}}$	mute output
12	P37	O	$\overline{\text{RELAY}}$ (B MD)	REC/PB change relay output
13	P36	O	$\overline{\text{R}}$/P	Dolby IC REC/PB select output
14	P35	O	EQ70	Playback EQ output for playing deck (Not Used)
15	P34	O	SEL A/$\overline{\text{B}}$	Dolby IC PB input Deck A/B select output
16	P33	O	AMS A/$\overline{\text{B}}$	AMS AMP input Deck A/B select output
17	P32	I	AU BUS	AUDIO BUS input
18	P31	O	$\overline{\text{BIAS}}$	Bias oscillation output
19	P30	O	AUB OUT	AUDIO BUS output
20	INT1	I	A BUS	AUDIO BUS normal input
21	NC	—	———	———
22	NC	—	———	———
23	NC	—	———	———
24	VSS		VSS	GND
25	$\overline{\text{RESET}}$	I	$\overline{\text{RESET}}$	Microcomputer reset input
26	XIN	I	XIN	Clock input (4MHz)
27	Xo	O	XOUT	Clock output (4MHz)
28	Φ	O	Φ	Not used (open)
29, 65	Vss		Vss	GND
30	P57	I	PW IN	POWER OFF detection input
31	P56	I	A STOP	Deck A STOP switch input
32	P55	I	$\overline{\text{A HALF}}$	Deck A Half switch input
33	P54	I	A SHUT	Deck A Reel table signal input
34	P53	I	A70 U	Deck A TYPE II switch input
35	P52	I	B STOP	Deck B STOP switch input
36	P51	I	B SHUT	Deck B Reel table signal input
37	P50	I	B70 U	Deck B TYPE II switch input
38	NC	—	———	———
39	P17	O	ARM 3	Deck A Reel Motor control out
40	P16	O	ARM 2	Deck A Reel Motor control out

Pin No.	Pin Name	I/O	Symbol	Description
41	P15	O	ARM 1	Deck A Reel Motor control out
42	P14	O	BRM 3	Deck B Reel Motor control out
43	P13	O	BRM 2	Deck B Reel Motor control out
44	P12	O	BRM 1	Deck B Reel Motor control out
45	P11	O	H/L	Capstan motor speed select
46	P10	O	A CM	A Capstan motor ON/OFF
47	P07	O	B CM	B Capstan motor ON/OFF
48	P06	I	BS/ASCH	Deck A Reel table/BS signal input
49	P05	I	A • P/BSCH	Deck B Reel table/A • P signal input
50	P04	O	A ◁	Deck A RVS LED output
51	P03	O	A ▷	Deck A FWD LED output
52	P02	O	A PLAY	Deck B RVS/FWD LED control output (Not Used)
53	P01	O	DUB H	High Speed Dubbing LED output
54	P00	O	DUB N	Normal Speed Dubbing LED output (Not Used)
55	NC	—	———	———
56	P27	O	CD SYNC	Auto CD Synchro LED output
57	P26	O	B ◁	Deck B RVS LED output
58	P25	O	B ▷	Deck B FWD LED output
59	O24	O	B PLAY	Deck B RVS/FWD LED control output (Not Used)
60	P23	O	B PAUSE	Deck B PAUSE LED output
61	P22	O	B ●	Auto CD Synchro LED output
62	P21	O	PASS	PASS amplifier switch output
63	P20	I	TEST	Electrical adjustment test mode setting
64	NC	—	———	———
66	NC	—	———	———
67	Vcc		Vcc	POWER 5 ± 0.5V
68	AVss		AVss	Analog system GND
69	VREF	I	VREF	Analog system reference voltage input
70	D • A		DAC	GND
71	PWM		———	GND
72	P63		———	GND

[TEST MODE]

When making pin ⑬ low (connect TP1 to ground with jumper wire), following function operates.

1. Sourec monitor
   Release the line mute while recording.

- **IC361 MECHANISM CONTROLLER (M3747M4-220SP)**

The Mechanism deck is controlled.

Pin No.	Pin Name	I/O	Description
1	$\overline{\text{TEST}}$	I	TEST mode selector terminal "H": NORMAL MODE, "L": TEST MODE
2	$\overline{\text{BIAS}}$	O	Bias osc terminal "L": ON
3	SPEED H/L	O	NORMAL/HIGH selector for recording equalizer, "H": HIGH, "L": NORMAL
4	$\overline{\text{B REC}}$	O	LED drive terminal for B deck record mode "L": LIGHT
5	$\overline{\text{DUB H}}$	O	LED drive terminal for HIGH SPEED DUBBING "L": LIGHT
6	$\overline{\text{DUB N}}$	O	LED drive terminal for NORMAL SPEED DUBBING "L": LIGHT (Not in used)
7	$\overline{\text{A PLAY}}$	O	LED drive terminal for A deck play mode "L": LIGHT
8	$\overline{\text{B PLAY}}$	O	LED drive terminal for B deck play mode "L": LIGHT
9	$\overline{\text{B PAUSE}}$	O	LED drive terminal for B deck pause mode "L": LIGHT
10	KEY Y	I	
11	KEY X		

KEY Y INPUT	STOP-B	PAUSE-B	PLAY-B	–	REW-A	FF-A
KEY X INPUT	STOP-A	PLAY-A	REW-B	FF-B	REC-B	DUB H
IC361 Pin ⑩, ⑪	0V	0.65V	1.35V	2.15V	2.84V	3.57V

12	N.C.	–	Not in used (Open)
13	PW SW	I	POWER switch input terminal "H": POWER ON (The equipment is fixed at "H")
14	B SHUT	I	S-side reel rotation detection at DECK-B
15	A SHUT	I	S-side reel rotation detection at DECK-A
16	PW IN (AC)	I	Power in terminal "H": POWER ON
17	$\overline{\text{PW HOLD}}$	O	Power holding output terminal "L": POWER ON HOLDING (Not in used)
18	VREF	I	Reference voltage +5V
19	XI	I	Oscillation input terminal } (4MHz)
20	XO	O	Oscillation output terminal } (4MHz)
21	VSS	–	Ground terminal
22	VCC	–	+5V power supply terminal
23	$\overline{\text{B STOP SW}}$	I	Mechanism play mode switch input for DECK-B "H": PLAY
24	$\overline{\text{A STOP SW}}$	I	Mechanism play mode switch input for DECK-A "H": PLAY
25	RESET	I	RESET signal input terminal "L": RESET
26	AU BUS IN	I	SIRCS signal input terminal
27	$\overline{\text{REC DT}}$	I	REC claw detection at DECK-B "L": REC CLAW PROOF
28	$\overline{\text{B HALF}}$	I	Half pawl input for DECK-B "L": AVAILABLE
29	$\overline{\text{A HALF}}$	I	Half pawl input for DECK-A "L": AVAILABLE
30	CAP H/L	O	Tape speed selector "L": HIGH SPEED, "H": NORMAL SPEED
31	CAPM	O	Capstan motor ON/OFF switch "L": ON
32	TRG H/L	O	Clamp voltage output terminal
33	B TRG	O	Trigger signal output for DECK-B
34	A TRG	O	Trigger signal output for DECK-A
35	AU BUS OUT	O	SIRCS signal output terminal
36	INH	O	Inhibit signal output terminal
37	PB A/B	O	DECK-A/DECK-B play selector, at DECK-B "H": DECK-A, "L": DECK-B
38	RELAY	O	Recording/play selector at DECK-B "H": RECORDING
39	R/P	O	Recording/play selector for dolby (IC304) "H": PLAY
40	$\overline{\text{R M}}$	O	Recording mute ON/OFF "L": MUTE ON
41	$\overline{\text{L M}}$	O	Line mute ON/OFF "L": MUTE ON
42	ER CHECK	O	Error check terminal "L": Checked, "H": Not Checked (Not in used)

- **IC450 CD MECHANISM CONTROLLER (μPD75516GF-461-3B9)**

This IC carries out data communication with CXA1372AQ (RF signal processing and servo processing), CXD2500BQ (digital signal processing), MSM6538-01GS-VKR1 (digital filter) and μPD75517GF (CD master controller) of CD section to mainly control mechanism section.

Pin No.	Pin Name	I/O	Function
1			OPEN
2	AVDD	–	+5V power supply
3	VDD	–	+5V power supply
4	VDD	–	+5V power supply
5	ENCODER E3	I	Stock position detecting decoder input 3 *1
6	ENCODER E2	I	Stock position detecting decoder input 2 *1
7	ENCODER E1	I	Stock position detecting decoder input 1 *1
8	ENCODER E0	I	Stock position detecting decoder input 0 *1
9	D7	I/O	Not used. (Connected to GND.)
10	D6	I/O	
11	D5	I/O	
12	D4	I/O	
13	D3	I/O	
14	D2	I/O	
15	D1	I/O	
16	D0	I/O	
17	GFS	I	GFS signal from digital signal processor (CXD2500BQ). "L": NG, "H": OK.
18	SENSE	I	SENS signal from digital signal processor (CXD2500BQ)
19	DOWN SW	I	Down input of up/down selector
20	UP SW	I	Up input of up/down selector
21	A11	O	Not used. (open)
22	A10	O	
23	A9	O	
24	A8	O	
25	49PIN SELECT	I	Pin-49 function switching. "L": stock in, "H": box up/down.
26	LD ON	O	Optical pickup block laser diode control. "H": ON, "L": OFF.
27	WE	O	Not used. (open)
28	A12	O	Not used. (open)
29	A7	O	
30	A6	O	
31	A5	O	
32	A4	O	
33	GND	–	GND
34	A3	O	Not used. (open)
35	A2	O	
36	A1	O	
37	A0	O	
38	QINT	O	Communication data reading request to CD master controller (μPD75517)
39	M/F	I	Signal that indicates kind of communication data from CD master controller (μPD75517). "H": mechanism command, "L": file command.
40	SACK	O	Communication answer code to CD master controller (μPD75517)

Pin No.	Pin Name	I/O	Function
41	MREQ	I	Communication data reading request from CD master controller (μPD75517). Master request.
42	CMD3	I/O	Communication data 3 to/from CD master controller (μPD75517)
43	CMD2	I/O	Communication data 2 to/from CD master controller (μPD75517)
44	CMD1	I/O	Communication data 1 to/from CD master controller (μPD75517)
45	CMD0	I/O	Communication data 0 to/from CD master controller (μPD75517)
46	CHIN	I	Tracking jump number counting from RF/servo IC (CXA1372AQ)
47	FOK	I	Focus OK signal from RF/servo IC (CXA1372AQ). "H": OK.
48	SCOR	I	Subcode SYNC S0+S1 detecting from digital signal processor (CXD2500BQ)
49	SENSER	I	Tray position (stock in) detecting *2
50	SUBQ	I	Subcode Q data from digital signal processor (CXD2500BQ)
51	GND	–	GND
52	SQCK	O	Subcode Q data reading clock to digital signal processor (CXD2500BQ)
53	ADJ	I	Test mode. Fixed at "H" ("L": test mode).
54	GND	–	GND
55	XT1	I	Not used. (Connected to GND.)
56	XT2	O	Not used. (open)
57	GND	–	GND
58	X1	I	Connected to system clock (4.19MHz) oscillator.
59	X2	O	
60	RESET	I	Reset from CD master controller (μPD75517). "L": reset.
61	D/F LATCH	O	Serial data latch to digital filter (CXD2554M-T6)
62	DSP LATCH	O	Serial data latch to digital signal processor (CXD2500BQ)
63	CLK	O	Serial clock to digital signal processor (CXD2500BQ) and digital filter (MSM6538-OIGS-VKR1)
64	DATA	O	Serial data to digital signal processor (CXD2500BQ) and digital filter (MSM6538-OIGS-VKR1)
65	DFCTSW	O	RF/Servo IC (CXA1372AQ) defect circuit ON/OFF control. "L": ON, "H": OFF. Disc defect detecting stops during focus search. (Set to "H".)
66	MUTE	O	CD audio mute. "H": mute.
67	CLAMP M3M	O	CLAMP motor control *3
68	CLAMP M3P	O	
69	UP/DOWN M2M	O	UP/DOWN motor control *4
70	UP/DOWN M2P	O	
71	LOADING M1M	O	Loading motor control *5
72	LOADING M1P	O	
73	A GND	–	GND
74	STOK OK	I	Tray position detecting. "L": stock up/down movable area *2
75	DISC SENS	I	Disc sensing. "H": with disc, "L": no disc.
76	DISC TABLE IN SW	I	Loading switch
77	DISC TABLE OUT SW	I	Unloading switch
78	TEST	I	Test mode. Fixed at "H" ("L": test mode).
79	AF ADJ	I	Test mode. Fixed at "H" ("L": test mode).
80			Not used. (open)

*1

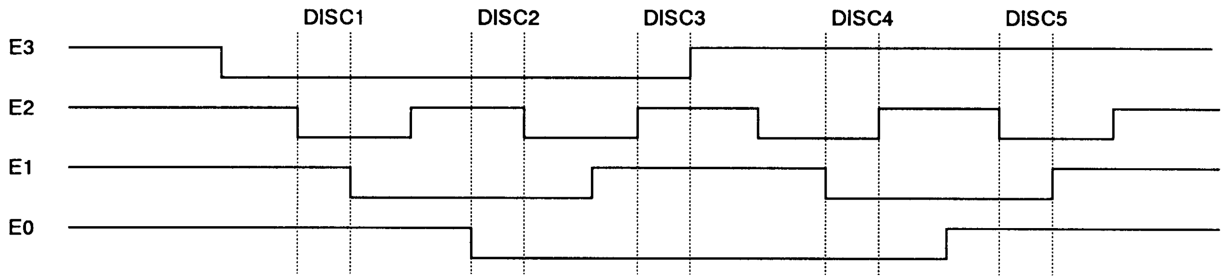

*2

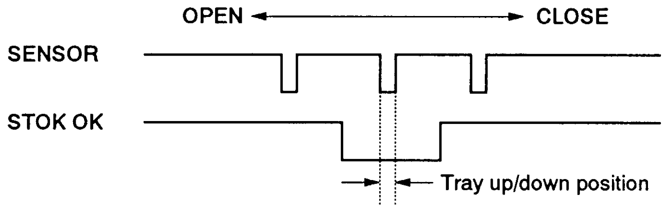

*3

	UP	DOWN	BRAKE
CLAMP M3P	H	L	H
CLAMP M3M	L	H	H

*4

	UP	DOWN	BRAKE
UP/DOWN M2P	H	L	H
UP/DOWN M2M	L	H	H

*5

	OUT	IN	BRAKE
LOADING M1P	H	L	H
LOADING M1M	L	H	H

• IC501 DISPLAY CONTROLLER (μPD78042-GF-033-3B9)

Pin No.	Pin Name	I/O	Function
1	8G	O	Fluorescent display driving
2	9G	O	
3	10G	O	
4	11G	O	
5	12G	O	
6	13G	O	
7	14G	O	
8	+5V	–	+5V power supply
9	CE	O	Chip select to tuner PLL IC (LC7218)
10	DATA.OUT	O	Serial data to tuner PLL IC (LC7218) and TONE controller (TC9184P)
11	CLOCK	O	Serial clock to tuner PLL IC (LC7218) and TONE controller (TC9184P)
12	DATA.IN	I	Serial data from tuner PLL IC (LC7218)
13	TUNED	I	Tuning discrimination from FM/AM IF amplifier (LA1831). "L": tuning.
14	STEREO	I	FM stereo discrimination from FM/AM IF amplifier (LA1831). "L": stereo.
15	LED CL	O	Reset to LED driver (M66342)
16	LED CE	O	Chip enable to LED driver (M66342)
17	RESET	I	Reset. "L": reset.
18	T.MUT	O	Tuner muting. "H": mute.
19	A.MUT	O	Audio muting. "L": mute.
20	GND	–	GND
21	VAR	I	Destination switching *1
22	12K	I	Spectrum analyzer (12KHz)
23	4K	I	Spectrum analyzer (4KHz)
24	1K	I	Spectrum analyzer (1KHz)
25	400	I	Spectrum analyzer (400Hz)
26	100	I	Spectrum analyzer (100Hz)
27	KEY.IN	I	Key input *2
28	KEY.IN	I	
29	AV	–	+5V power supply
30	AV.REF	–	+5V power supply
31	XT1	I	Subsystem clock (32.768KHz). Connected to crystal oscillator.
32	XT2	O	
33	GND	–	GND
34	X1	I	System clock (32.768KHz). Connected to crystal oscillator.
35	X2	O	
36	TONE/LED DATA	O	Serial data to LED driver (M66342P)
37	TONE/LED CLOCK	O	Serial clock to LED driver (M66342P)
38	TONE/LED CE	O	Chip enable to TONE controller (TC9184P)
39	AU.B-OUT	O	Audio bus
40	CD.DATA D3	I	Display data 3 from CD controller (μPD75517)
41	CD.DATA D2	I	Display data 2 from CD controller (μPD75517)
42	CD.DATA D1	I	Display data 1 from CD controller (μPD75517)
43	CD.DATA D0	I	Display data 0 from CD controller (μPD75517)
44	CD.DPCLK	I	Serial clock from CD controller (μPD75517)
45	AMP CLOCK	O	Serial clock to serial IN/parallel OUT (M50253P)

Pin No.	Pin Name	I/O	Function
46	AMP DATA	O	Serial data to serial IN/parallel OUT (M50253P)
47	STOP	I	Power failure detecting (M51953BPF)
48	GND	–	GND
49	AU.B-IN	I	Audio bus
50	SIRCS.IN	I	Infrared remote commander signal
51	POWER	O	Power ON/OFF control. "L": power supply ON.
52	+5V	–	+5V power supply
53	P19	O	Fluorescent display driving
54	P20	O	
55	P18	O	
56	P17	O	
57	P9	O	
58	P10	O	
59	P11	O	
60	P12	O	
61	P13	O	
62	P14	O	
63	P15	O	
64	P16	O	
65	P1	O	
66	P2	O	
67	P3	O	
68	P4	O	
69	P5	O	
70	P6	O	
71	–27V	–	–27V power supply for driving fluorescent display
72	P7	O	Fluorescent display driving
73	P8	O	
74	1G	O	
75	2G	O	
76	3G	O	
77	4G	O	
78	5G	O	
79	6G	O	
80	7G	O	

*1

Voltage (Vdc)	0.6	1.3	2.0	2.6	3.1	3.7
Destination	AUS EA SP E	UK AEP	CAD U	IT	EE	G

AUS : Australian model
EA : Saudi Arabia model
SP : Singapore model
CND : Canadian model
IT : Italian model
EE : East European model
G : German model

*2

Voltage (Vdc)	0.0	0.3	0.6	0.9	1.2	1.5	1.9	2.2	2.5	5.0
Pin ㉗	POWER	TUNER	CD	TAPE	VIDEO	REC				No input
Pin ㉘	KARAOKE	DISPLAY	TIMER	MEMORY/ NEXT	STEREO/ MONO	MODE	BAND	–	+	No input

• IC601 CD MASTER CONTROLLER (μPD75517-GF-209-3B9)

Pin No.	Pin Name	I/O	Function
1	KEY0	I	Key input 0 *1
2	VDD	–	+5V power supply
3		–	Connected to +5V.
4		–	Connected to +5V.
5			Open
6			Open
7	ON/OFF	O	CD player power supply ON/OFF. "H": ON.
8	MD RESET	O	CD mechanism controller (μPD75516GF) resetting. "L": reset
9	CD.DPCLK	O	Clock for transferring display data to display controller (μPD78042GF)
10			Open
11	AUBUS OUT	O	Audio bus
12	MREQ	O	Communication data reading request to CD mechanism controller (μPD75516GF). Master request.
13	AUBUS/SIRCS	I	Audio bus/SIRCS switching. Connected to +5V.
14	TEST	I	Fixed at "H". ("L": Accident code appears when power ON.)
15	SUF.REP	I	Fixed at "H". ("L": All discs repeat shuffle.)
16	D.SKIP	I	Fixed at +2.5V.
17			Connected to +5V.
18			
19			
20			
21			
22			
23			
24	SACK	I	Communication answer code from CD mechanism controller (μPD75516GF)
25			Open
26			
27			
28			
29	P53		Open
30	P52		
31	P51		
32	DISC-5	O	Disc 5 LED driving. "H": lighting.
33	VSS		GND
34	DISC-4	O	Disc 4 LED driving. "H": Lighting.
35	DISC-3	O	Disc 3 LED driving. "H": Lighting.
36	DISC-2	O	Disc 2 LED driving. "H": Lighting.
37	DISC-1	O	Disc 1 LED driving. "H": Lighting.
38			Open
39			
40			
41	M/F	O	Signal that indicates the kind of communication data to CD mechanism controller (μPD75516GF). "H": mechanism command, "L": file command.
42	CD.DATA D3	O	Display data 3 to display controller (μPD78042GF)
43	CD.DATA D2	O	Display data 2 to display controller (μPD78042GF)
44	CD.DATA D1	O	Display data 1 to display controller (μPD78042GF)
45	CD.DATA D0	O	Display data 0 to display controller (μPD78042GF)

Pin No.	Pin Name	I/O	Function
46			Connected to GND.
47			
48	QINT	I	Communication data reading request (interruption request) from CD mechanism controller (μPD75516GF).
49	AUBUS IN	I	Audio bus
50			Connected to +5V.
51			
52			
53			Connected to GND.
54	VSS	–	GND
55	XTI	I	Connected to GND.
56	XT2	O	Open
57	IC		Connected to GND.
58	X1	I	Connected to system clock (4.19MHz) oscillator.
59	X2	O	
60	RESET	I	Reset. "L": reset.
61			Open
62			
63			
64			
65			
66			
67	P131	O	Orange LED (disc 1 to disc 5) driving. "L": Lighting.
68	P130	O	Green LED (disc 1 to disc 5) driving. "L": Lighting.
69	CMD3	I/O	Communication data 3 to/from CD mechanism controller (μPD75516GF)
70	CMD2	I/O	Communication data 2 to/from CD mechanism controller (μPD75516GF)
71	CMD1	I/O	Communication data 1 to/from CD mechanism controller (μPD75516GF)
72	CMD0	I/O	Communication data 0 to/from CD mechanism controller (μPD75516GF)
73	AVSS	–	GND
74			Connected to GND.
75			
76			
77			
78	KEY3	I	Not used. (Connected to +5V.)
79	KEY2	I	Key input 2 *1
80	KEY1	I	Key input 1 *1

*1

Voltage (Vdc)	0.0	0.6	1.3	2.0	2.6	3.2	3.8	4.4	5.0
KEY0	PLAY	PAUSE	STOP	EJECT-1	EJECT-2	EJECT-3	EJECT-4	EJECT-5	No input
KEY1	▷▷❘/▷▷	EDIT	DISC-1	DISC-2	DISC-3	DISC-4	DISC-5		No input
KEY2	❘◁◁/◁◁	M.SCAN	REPEAT	PROGRAM	SHUFFLE	CONTINUE	CLEAR	CHECK	No input

SECTION 7
DIAGRAMS

7-1. CIRCUIT BOARDS LOCATION

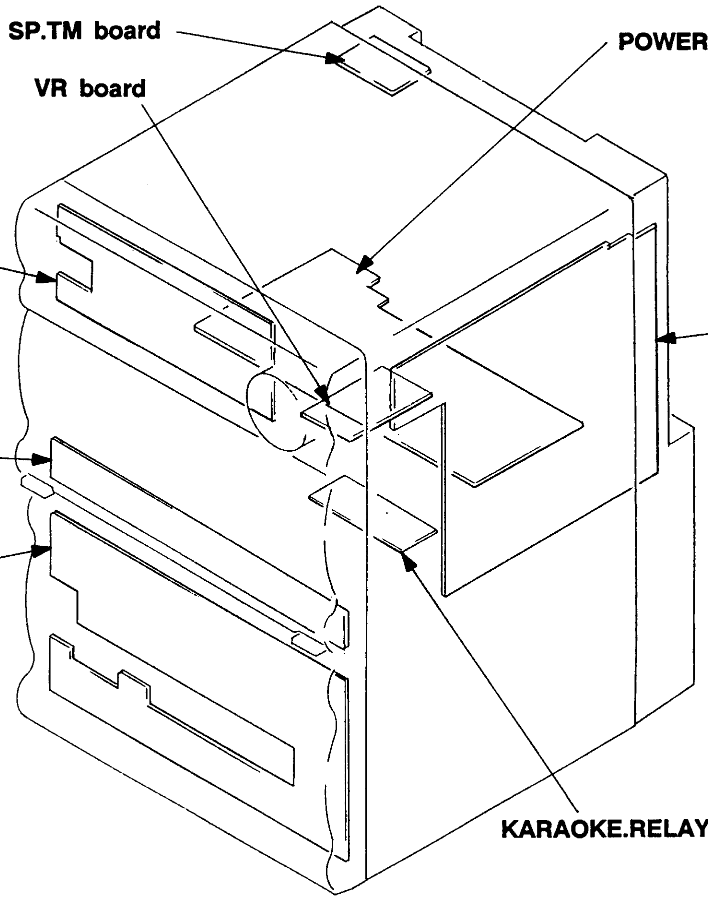

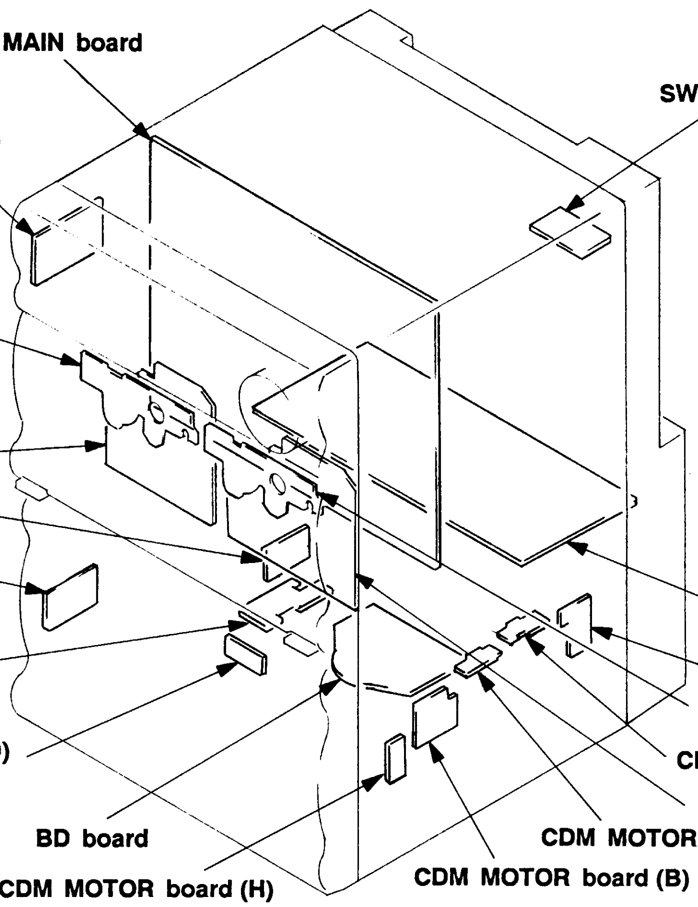

7-2. BLOCK DIAGRAM —MAIN SECTION —

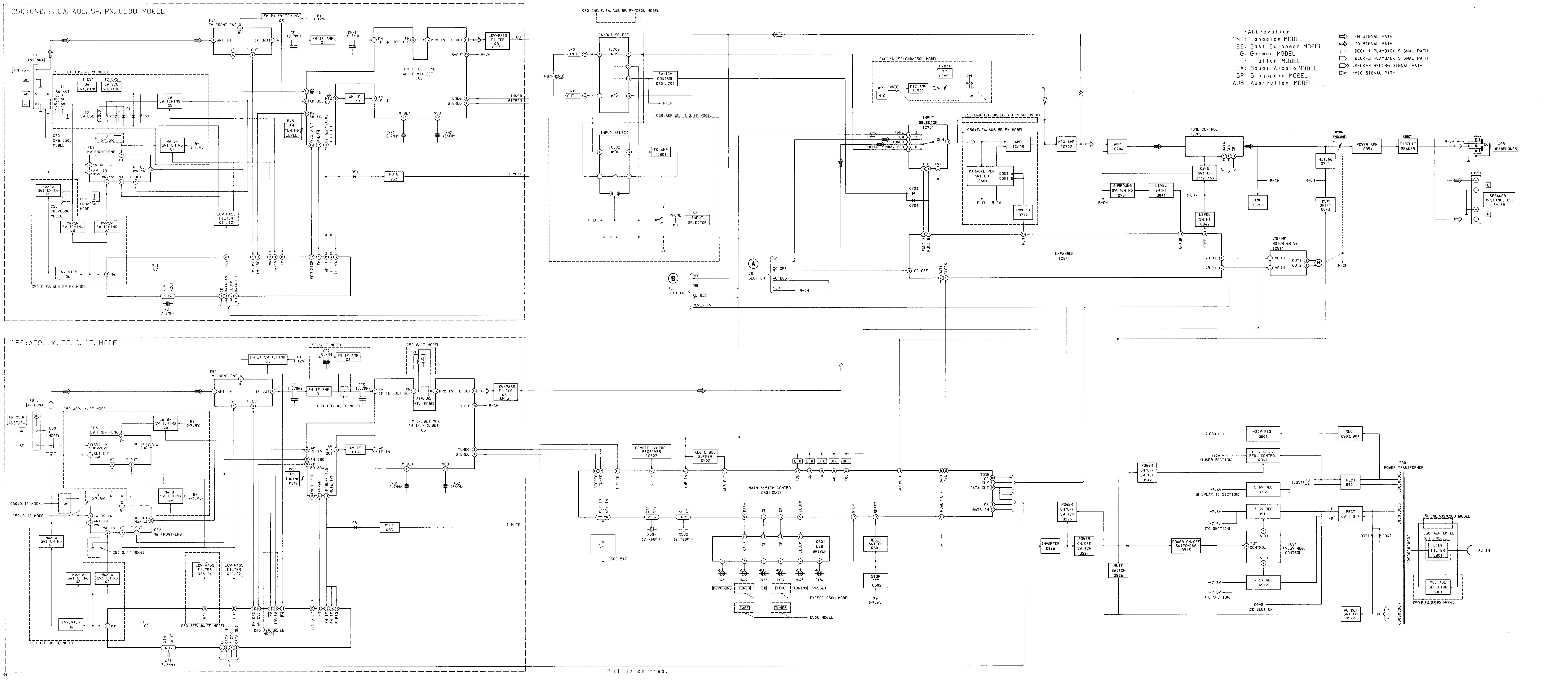

R-CH is omitted.

7-3. BLOCK DIAGRAM —CD/DISPLAY SECTION—

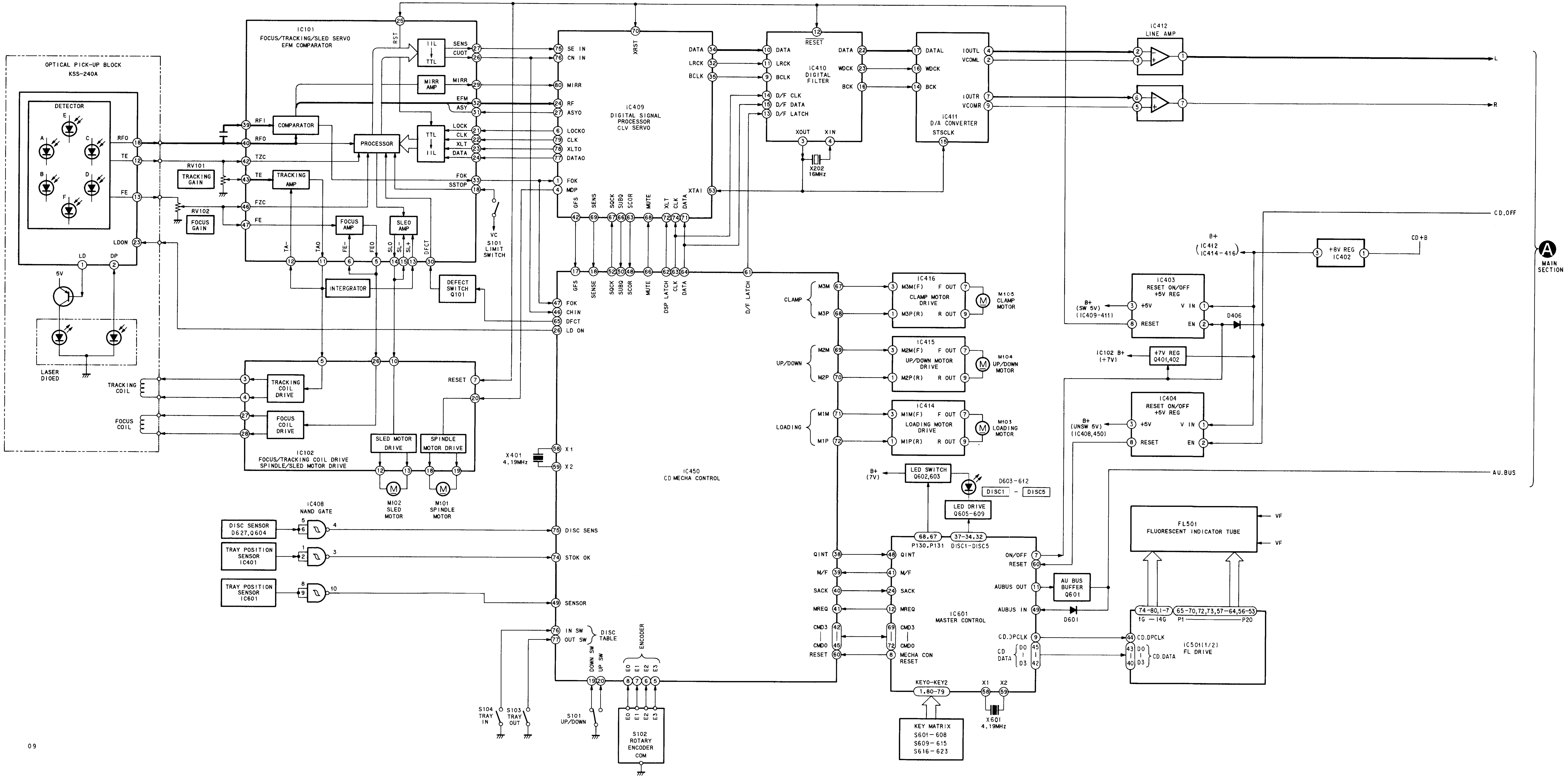

09

7-4. BLOCK DIAGRAM —DECK (HCD-C50) SECTION —

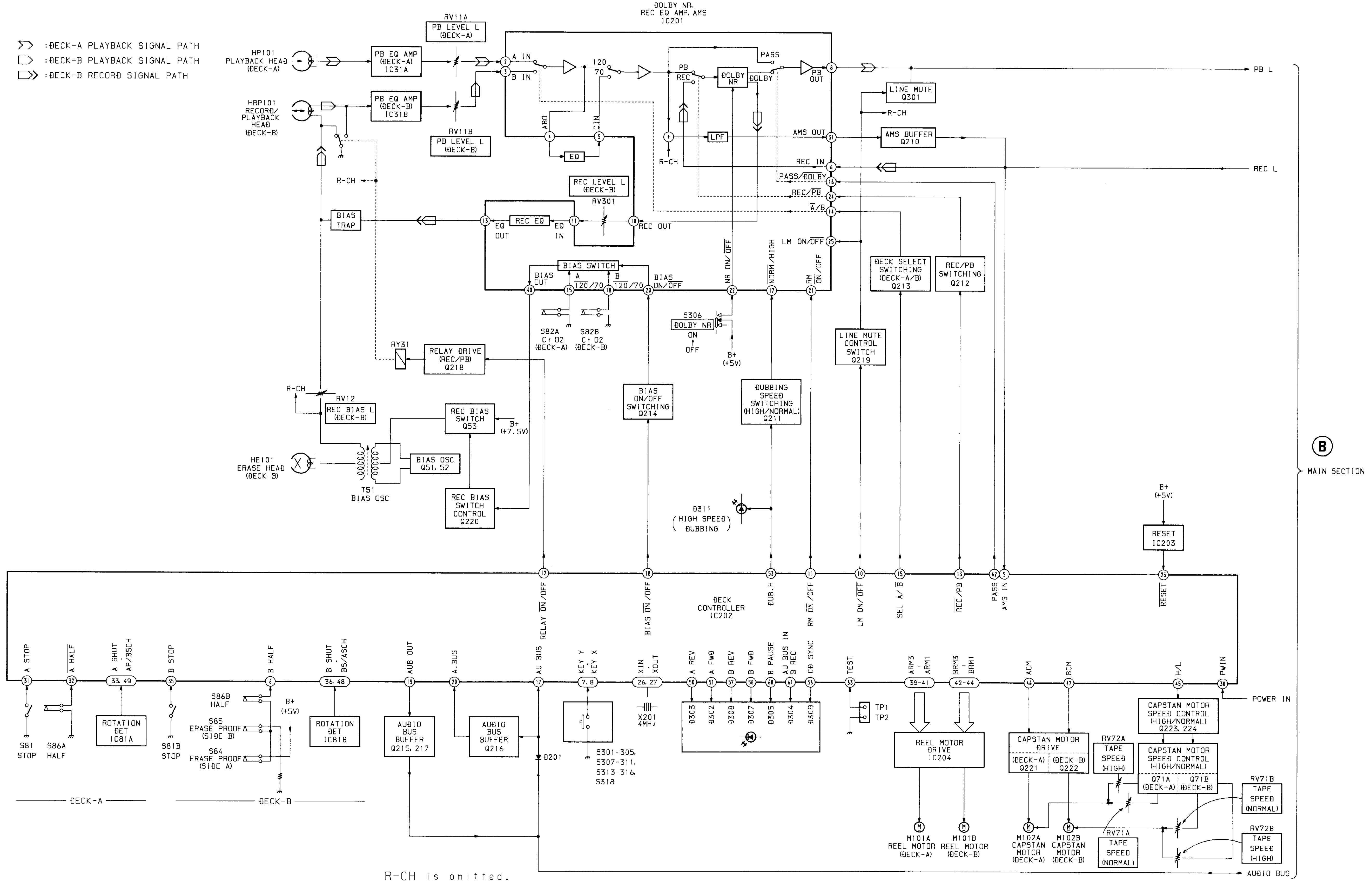

7-5. BLOCK DIAGRAM —DECK (HCD-C50U) SECTION —

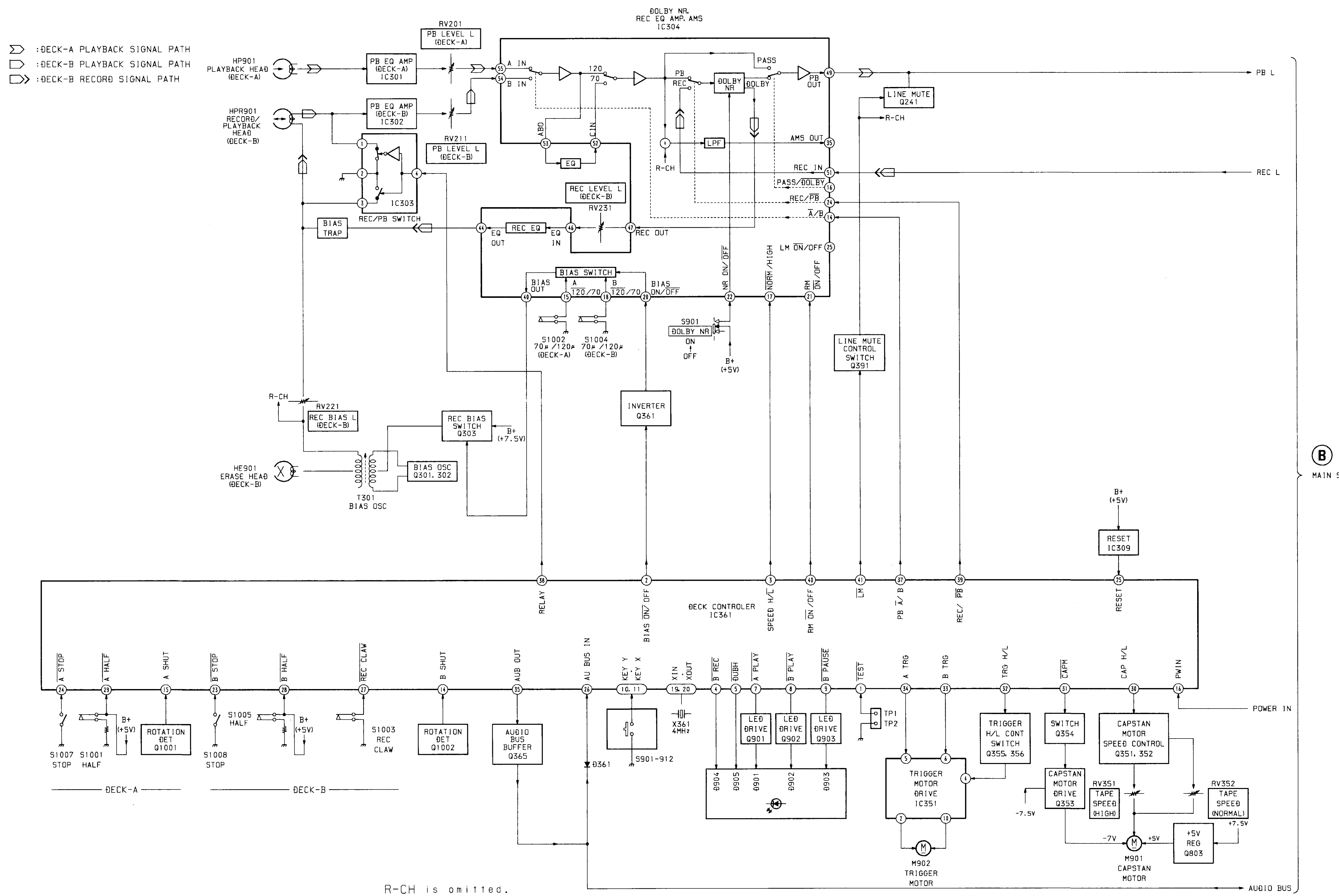

7-6. PRINTED WIRING BOARD
• MAIN SECTION (HCD-C50 : AEP, UK, G, IT, EE)
• See page 32 for Circuit Boards Location and see page 97, 98 for Semiconductor Lead Layouts.

• Semiconductor Location

Ref. No.	Location	Ref. No.	Location
D21	C-9	Q1	D-11
D51	C-7	Q2	D-10
D703	G-12	Q3	E-11
D704	G-12	Q4	E-11
D705	I-9	Q5	E-11
D841	H-6	Q6	F-10
D861	C-4	Q7	D-13
D862	C-3	Q8	D-13
D901	G-22	Q9	E-13
D903	E-20	Q21	B-10
D904	E-20	Q22	C-11
D905	E-21	Q23	A-10
D906	B-16	Q24	B-11
D911	C-23	Q51	B-6
D912	C-23	Q52	B-6
D913	C-23	Q53	C-5
D914	C-23	Q701	G-13
D915	D-20	Q702	G-13
D920	E-18	Q731	I-9
D921	B-21	Q732	J-8
D922	B-16	Q733	J-8
D923	B-20	Q741	H-5
D924	A-18	Q782	J-8
D941	D-17	Q783	J-7
D942	B-23	Q791	H-5
D943	G-18	Q841	H-8
		Q842	H-7
IC21	B-9	Q843	H-7
IC51	D-8	Q901	E-21
IC701	G-11	Q911	K-20
IC702	I-11	Q912	K-18
IC703	H-14	Q913	E-18
IC704	J-9	Q922	B-20
IC705	J-7	Q923	B-19
IC706	I-6	Q924	B-17
IC801	J-11	Q925	B-16
IC802	J-13	Q926	B-20
IC841	H-7	Q941	D-17
IC861	H-2	Q942	C-17
IC911	D-20		
IC921	E-18		
IC951	H-19		

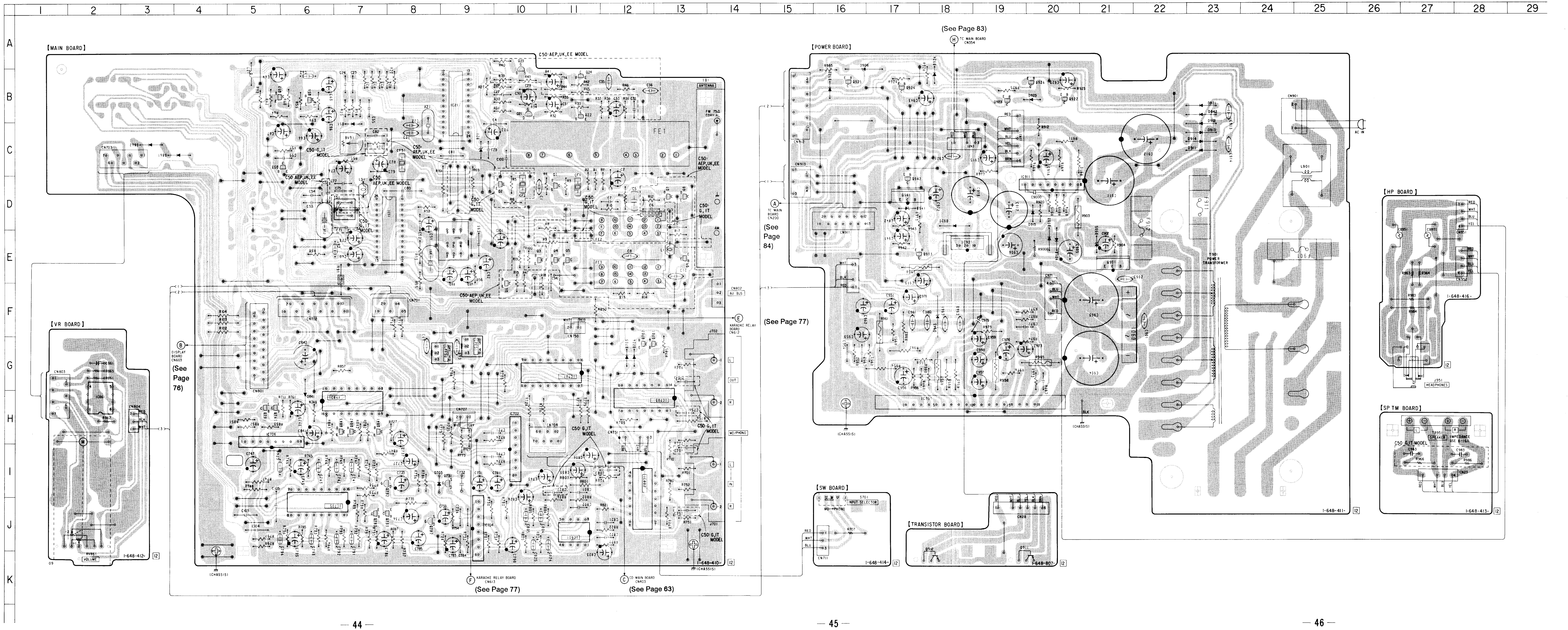

Note:

- ○— : parts extracted from the components side.
- ·⊢ : indicates side identified with part number.
- Δ : internal component.
- ░░ : Pattern on the side which is seen.

- EE : East European model
- IT : Italian model
- G : German model

7-7. SCHEMATIC DIAGRAM

• MAIN SECTION (HCD-C50 : AEP, UK, G, IT, EE)

• IC BLOCK DIAGRAMS

IC21 LC7218

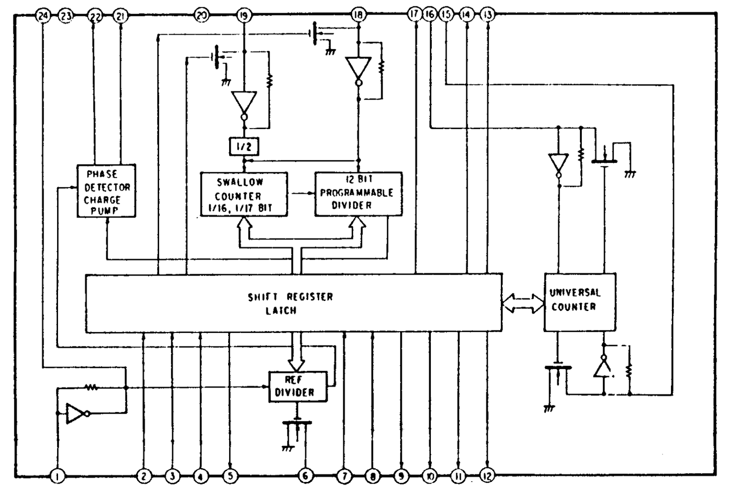

IC51 LA1831

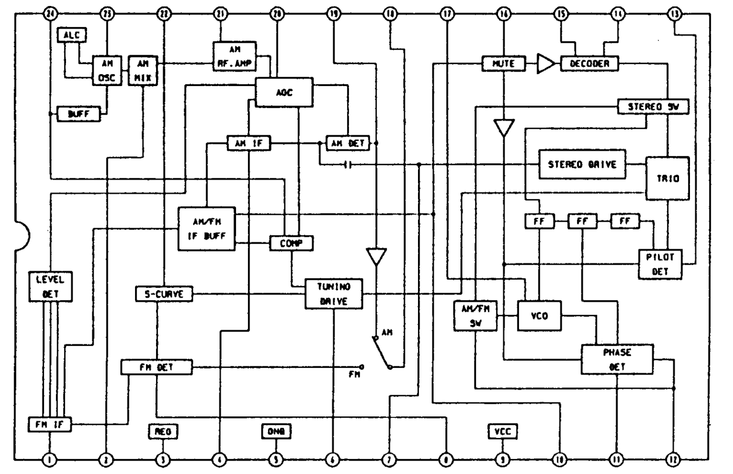

IC701 MC14052

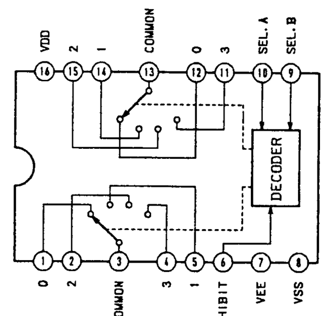

Note:

- All capacitors are in μF unless otherwise noted. pF:μμF 50WV or less are not indicated except for electrolytics and tantalums.
- All resistors are in Ω and 1/4W or less unless otherwise specified.
- △ : internal component.
- [nonflammable resistor symbol] : nonflammable resistor.
- [fusible resistor symbol] : fusible resistor.

Note: The components identified by mark ⚠ or dotted line with mark ⚠ are critical for safety. Replace only with part number specified.

- ▬▬ : B+ Line
- ▪▪▪▪ : B– Line
- ▭ : adjustment for repair.
- Voltage and waveforms are dc with respect to ground under no-signal conditions.
  no mark : FM
- Voltages are taken with a VOM (Input impedance 10Ω). Voltage variations may be noted due to normal production tolerances.
- Signal path.
  - ⇨ : FM
  - ⇨ : CD
  - ⊃ : PB
  - ⊃› : REC
  - ▷ : MIC

- EE : East European model
- IT : Italian model
- G : German model

- IC BLOCK DIAGRAMS

IC21 LC7218

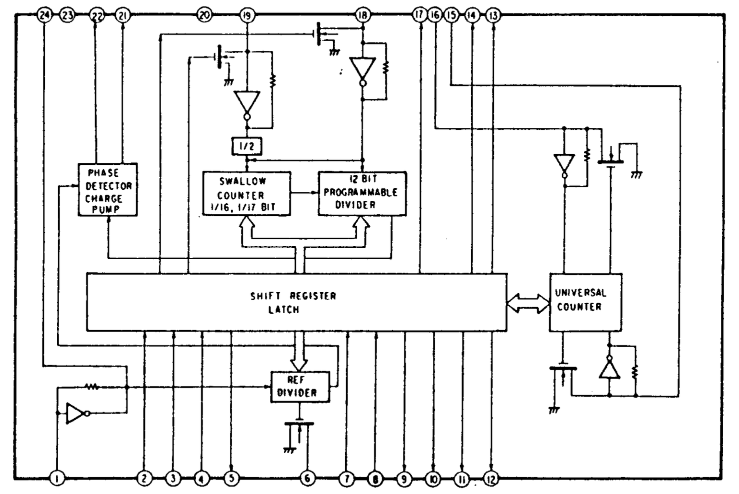

IC51 LA1831

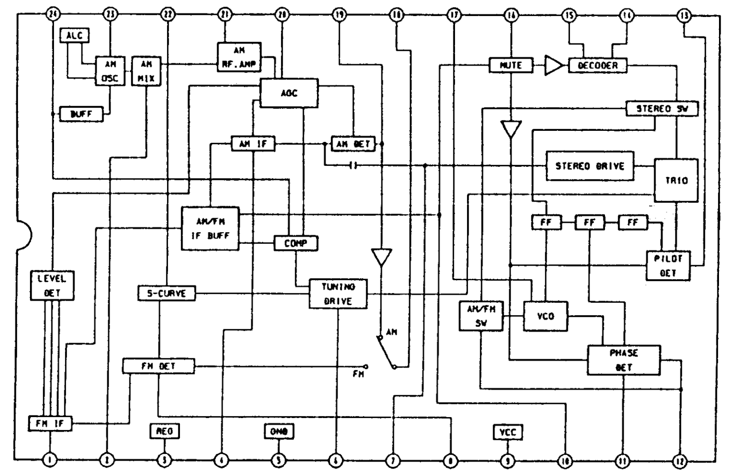

IC701 MC14052

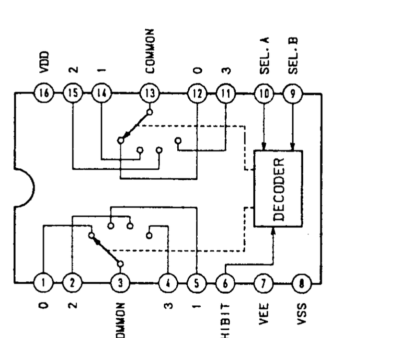

IC705 TC9184P

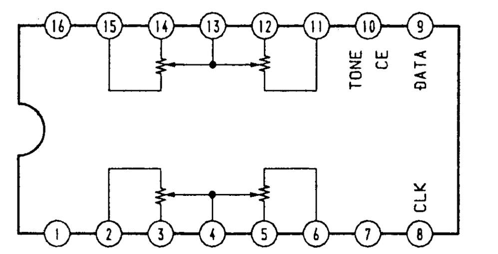

Note:

- All capacitors are in μF unless otherwise noted. pF:μμF 50WV or less are not indicated except for electrolytics and tantalums.
- All resistors are in Ω and 1/4W or less unless otherwise specified.
- △ : internal component.
- (symbol) : nonflammable resistor.
- (symbol) : fusible resistor.

Note:	Note:
The components identified by mark ⚠ or dotted line with mark ⚠ are critical for safety. Replace only with part number specified.	Les composants identifiés par une marque ⚠ sont critiques pour la sécurité. Ne les remplacer que par une pièce portant le numéro spécifié.

- ▬▬ : B+ Line
- ▪▪▪▪▪ : B– Line
- ▭ : adjustment for repair.
- Voltage and waveforms are dc with respect to ground under no-signal conditions.
  no mark : FM
- Voltages are taken with a VOM (Input impedance 10Ω). Voltage variations may be noted due to normal production tolerances.
- Signal path.
  - ⇨ : FM
  - ⇨ : CD
  - ▷ : PB
  - ▷› : REC
  - ▷ : MIC

- CND : Canadian model
- EA : Saudi Arabia model
- AUS : Australian model
- SP : Singapore model

7-8. SCHEMATIC DIAGRAM
- MAIN SECTION (HCD-C50 : CND, E, EA, AUS, SP, PX/C50U)

7-9. PRINTED WIRING BOARD

- MAIN SECTION (HCD-C50 : CND, E, EA, AUS, SP, PX/C50U)
- See page 32 for Circuit Boards Location and see page 97, 98 for Semiconductor Lead Layouts.

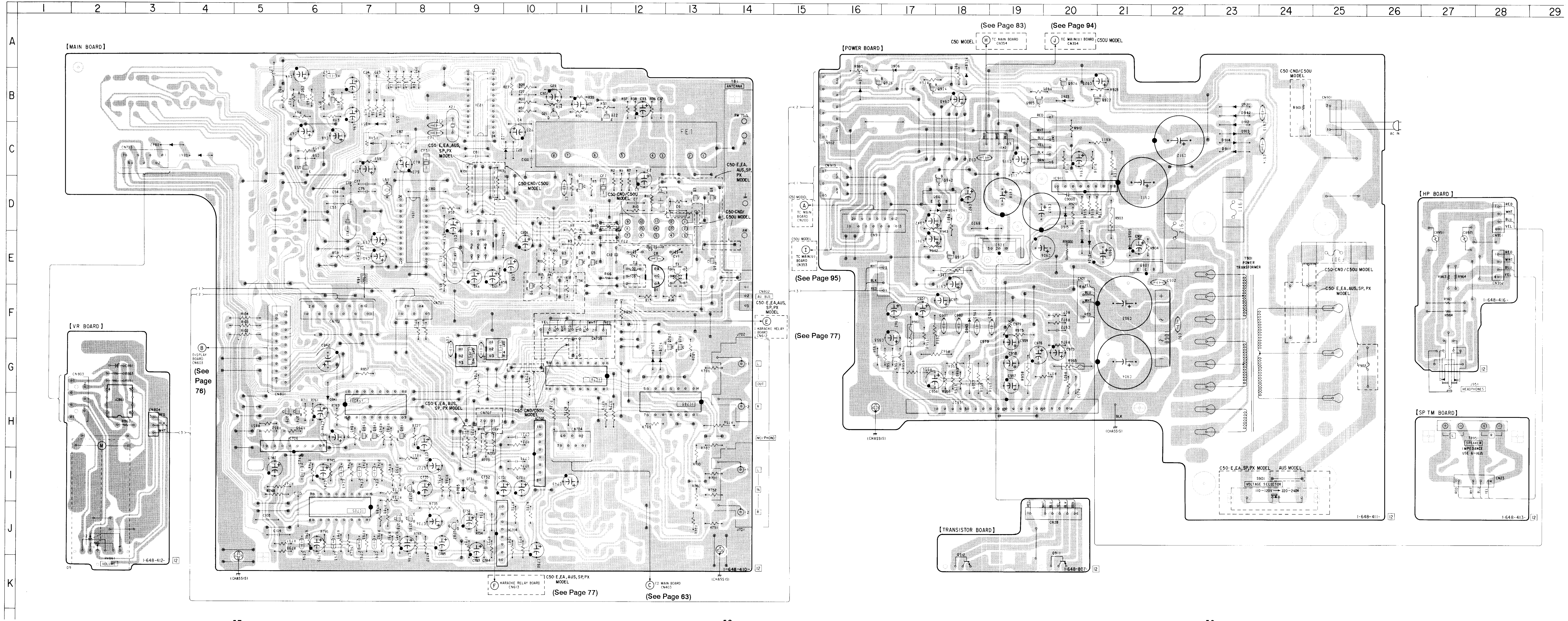

- Semiconductor Location

Ref. No.	Location	Ref. No.	Location
D1	F-13	Q1	D-11
D21	C-10	Q3	E-11
D51	C-7	Q4	E-11
D703	G-13	Q5	E-11
D704	G-13	Q6	F-10
D705	J-9	Q7	D-13
D841	H-6	Q8	D-13
D861	C-4	Q9	E-13
D862	C-3	Q21	B-11
D901	G-22	Q22	C-12
D903	E-20	Q51	B-6
D904	E-21	Q52	B-6
D905	E-21	Q53	D-6
D906	B-18	Q701	G-13
D911	C-23	Q702	G-13
D912	C-23	Q731	J-9
D913	C-23	Q732	J-8
D914	C-23	Q733	J-8
D915	D-20	Q741	H-6
D920	E-19	Q782	K-9
D921	B-23	Q783	K-8
D922	B-16	Q791	H-6
D923	B-20	Q841	I-8
D924	A-18	Q842	I-7
D941	D-18	Q843	I-7
D942	B-23	Q901	F-23
D943	G-18	Q911	K-20
		Q912	K-18
IC21	B-9	Q913	E-18
IC51	D-8	Q921	E-19
IC701	G-11	Q922	B-20
IC702	I-11	Q923	B-20
IC703	H-12	Q924	B-17
IC704	K-10	Q925	B-18
IC705	J-7	Q926	B-20
IC706	I-6	Q941	D-18
IC841	H-7	Q942	D-18
IC861	H-2		
IC911	D-21		
IC921	E-19		
IC951	H-19		

Note:

- o—— : parts extracted from the components side.
- ⇤ indicates side identified with part number.
- △ : internal component.
- ∴∴∴ : Pattern on the side which is seen.

- CND : Canadian model
- EA : Saudi Arabia model
- AUS : Australian model
- SP : Singapore model

7-10. PRINTED WIRING BOARD

- CD SECTION
- See page 32 for Circuit Boards Location and see page 97, 98 for Semiconductor Lead Layouts.

- **Semiconductor Location**

Ref. No.	Location
D406	F-13
D407	E-15
D408	E-15
D410	G-14
IC101	C-2
IC102	C-3
IC401	E-20
IC402	G-15
IC403	E-12
IC404	E-13
IC408	B-9
IC409	C-8
IC410	E-8
IC411	F-6
IC412	G-9
IC414	D-14
IC415	C-14
IC416	C-14
IC450	C-11
IC601	D-19
Q101	C-2
Q401	G-14
Q402	G-14

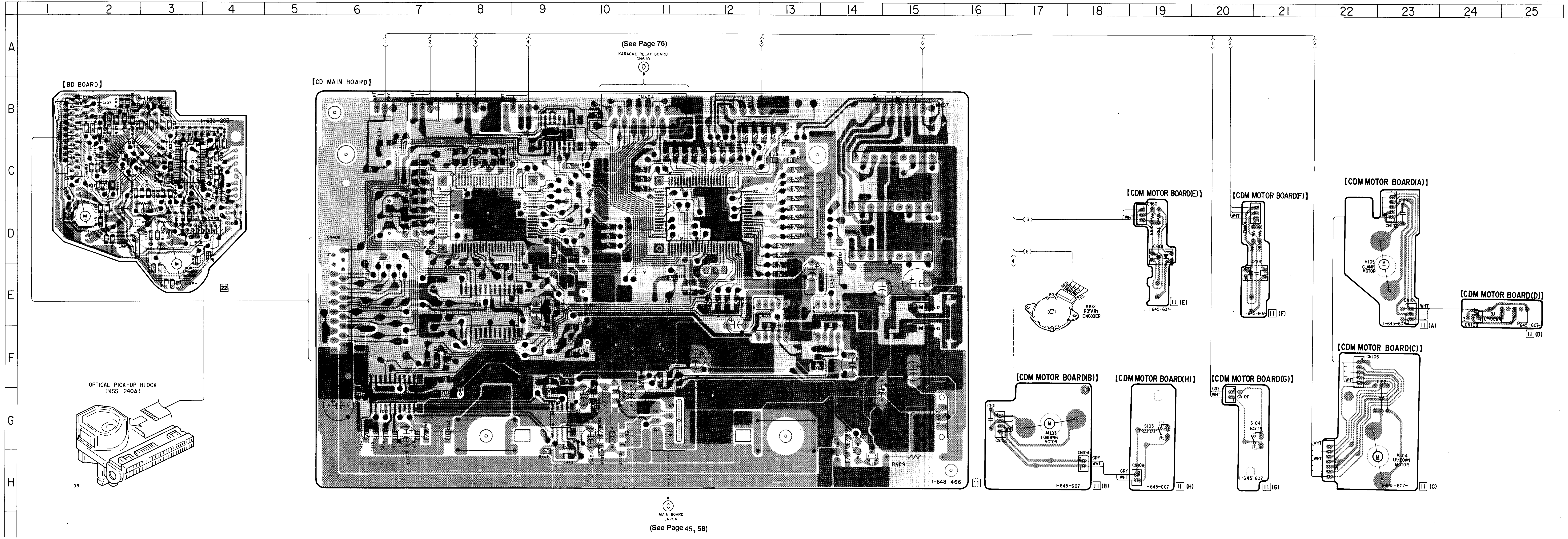

Note:

- ○—— : parts extracted from the components side.
- ● : Through hole.
- : Pattern on the side which is seen.
- : Pattern of the rear side.

7-10. PRINTED WIRING BOARD

• CD SECTION

• See page 32 for Circuit Boards Location and see page 97, 98 for Semiconductor Lead Layouts.

• **Semiconductor Location**

Ref. No.	Location
D406	F-13
D407	E-15
D408	E-15
D410	G-14
IC101	C-2
IC102	C-3
IC401	E-20
IC402	G-15
IC403	E-12
IC404	E-13
IC408	B-9
IC409	C-8
IC410	E-8
IC411	F-6
IC412	G-9
IC414	D-14
IC415	C-14
IC416	C-14
IC450	C-11
IC601	D-19
Q101	C-2
Q401	G-14
Q402	G-14

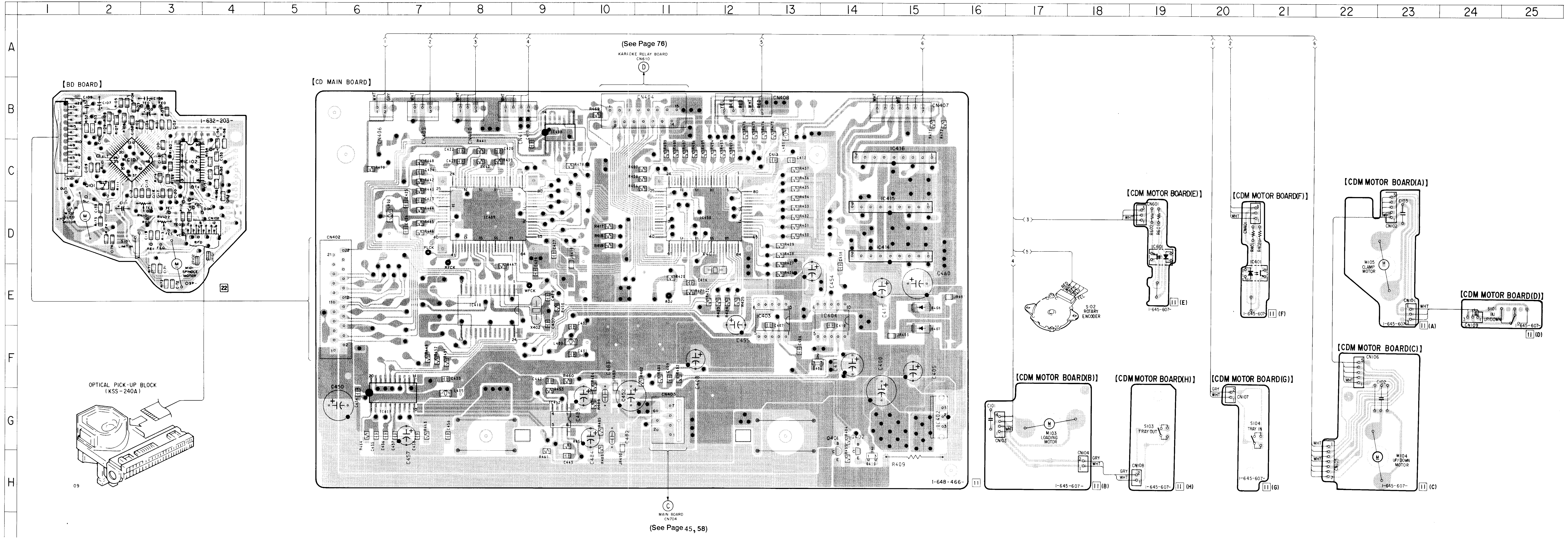

Note:

• ○—— : parts extracted from the components side.

• ● : Through hole.

• ░ : Pattern on the side which is seen.

• IC BLOCK DIAGRAMS

IC101 CXA1372Q

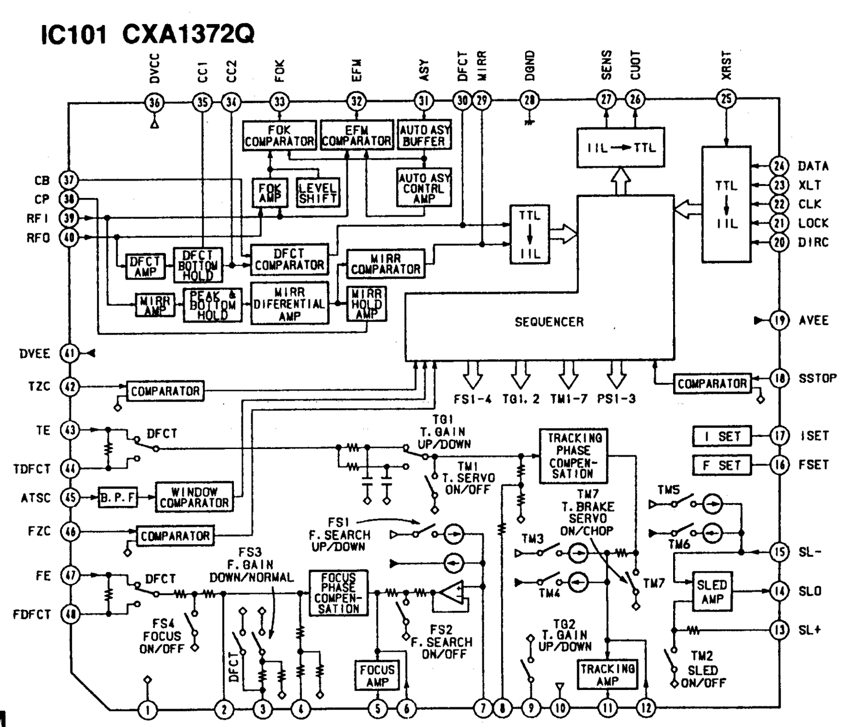

IC102 LA6532M

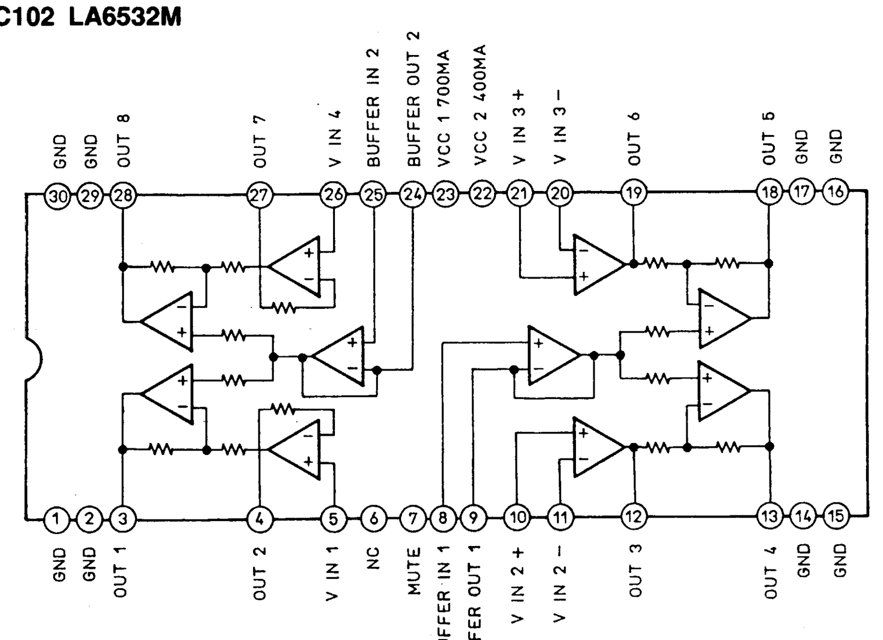

IC403, 404 LA5601

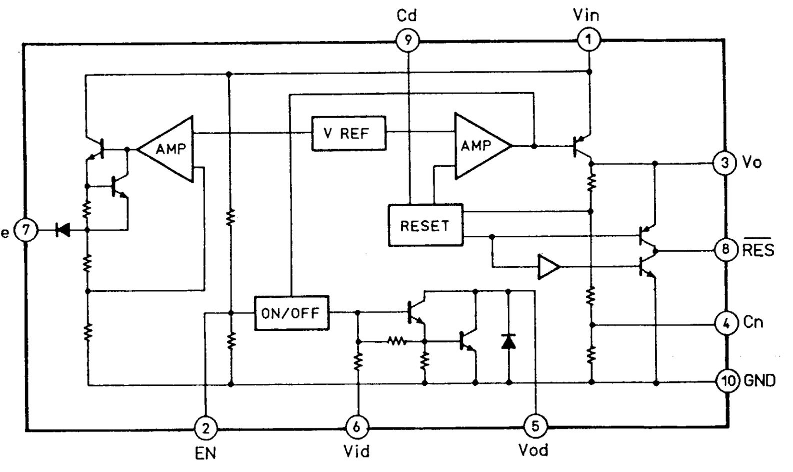

IC409 CXD2500BQ

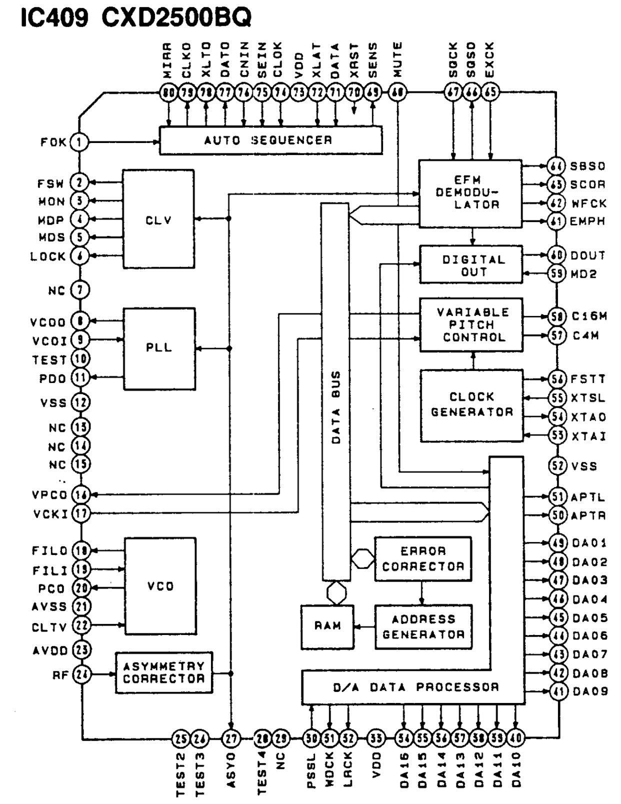

IC410 MSM6538-01GS-VKR1

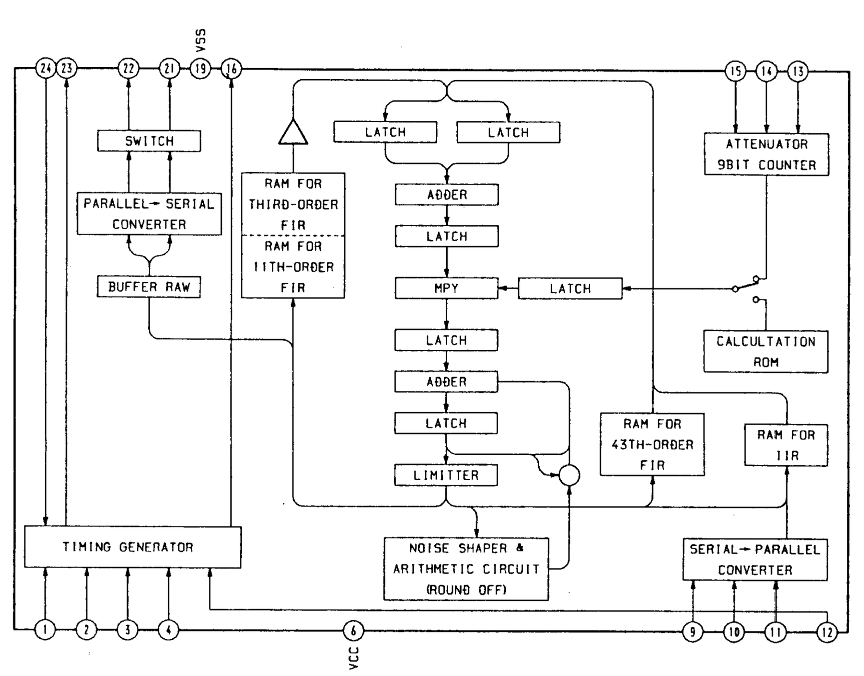

IC414, 415, 416 BA6418N

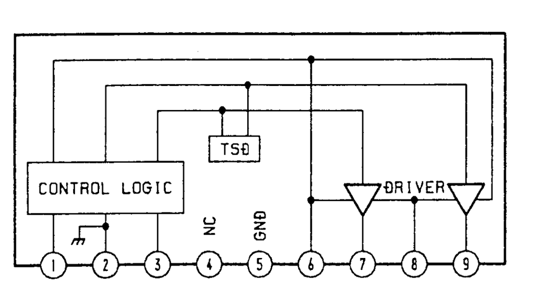

Note:

- All capacitors are in µF unless otherwise noted. pF:µµF 50WV or less are not indicated except for electrolytics and tantalums.
- All resistors are in Ω and 1/4W or less unless otherwise specified.
- △ : internal component.

Note:	Note:
The components identified by mark ⚠ or dotted line with mark ⚠ are critical for safety. Replace only with part number specified.	Les composants identifiés par une marque ⚠ sont critiques pour la sécurité. Ne les remplacer que par une pièce portant le numéro spécifié.

- ▬▬▬ : B+ Line
- ▪▪▪▪▪ : B– Line
- ▭ : adjustment for repair.
- Voltage and waveforms are dc with respect to ground under no-signal conditions.
  no mark : CD PLAY
- Voltages are taken with a VOM (Input impedance 10Ω). Voltage variations may be noted due to normal production tolerances.
- Waveforms are taken with a oscilloscope. Voltage variations may be noted due to normal production tolerances.
- Circled numbers refer to waveforms.
- Signal path.
  ⇨ : CD

7-11. SCHEMATIC DIAGRAM
• CD SECTION

• Waveforms

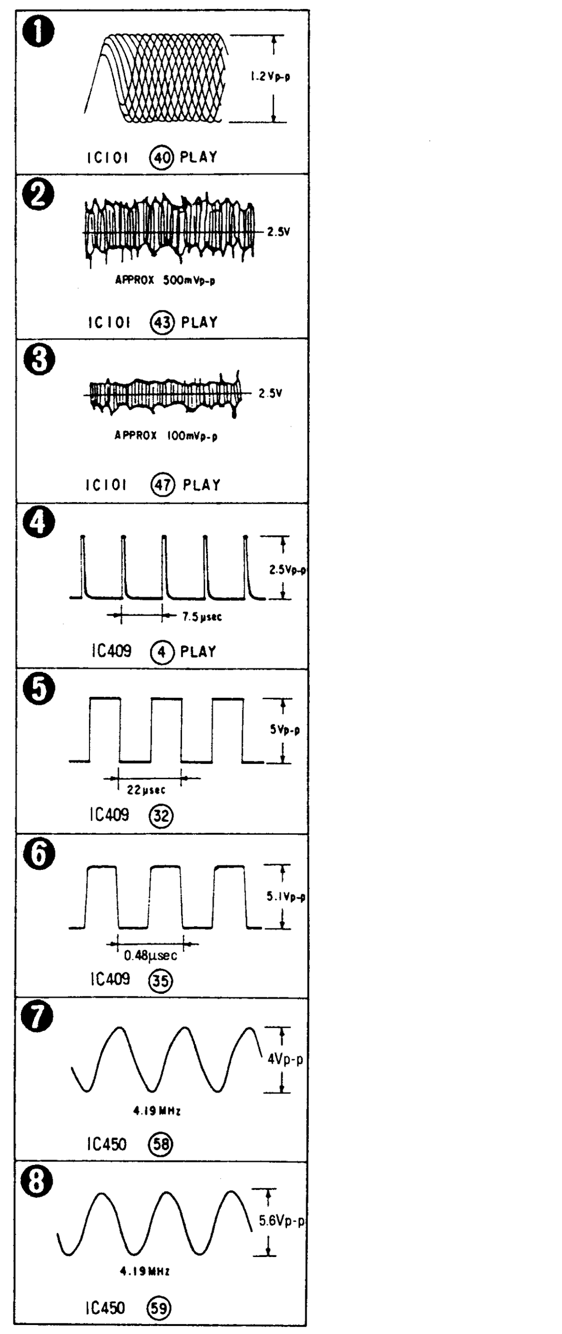

7-12. SCHEMATIC DIAGRAM
• DISPLAY SECTION

• **IC BLOCK DIAGRAM**
IC502 M51953BPF

Note:

- All capacitors are in μF unless otherwise noted. pF:μμF 50WV or less are not indicated except for electrolytics and tantalums.
- All resistors are in Ω and 1/4W or less unless otherwise specified.
- △ : internal component.
- ▬▬ : B+ Line
- ■■■■■ : B– Line
- Voltage and waveforms are dc with respect to ground under no-signal conditions.
  no mark : FM
- Voltages are taken with a VOM (Input impedance 10MΩ). Voltage variations may be noted due to normal production tolerances.
- Signal path.
  ⇨ : FM
  ▷ : MIC

- CND : Canadian model
- G : German model
- IT : Italian model
- EE : East European model
- EA : Saudi Arabia model
- AUS : Australian model
- SP : Singapore model

7-13. PRINTED WIRING BOARD

- DISPLAY SECTION
- See page 32 for Circuit Boards Location and see page 97, 98 for Semiconductor Lead Layouts.

• **Semiconductor Location**

Ref. No.	Location	Ref. No.	Location
D421 ○	C-18	D881	I-6
D421 ●	C-28	D882	I-7
D422 ○	C-17	D883	I-9
C422 ●	C-27	D884	I-9
D423 ○	C-16	D885	I-10
D423 ●	C-26		
D424 ○	C-15	IC401 ○	C-21
D424 ●	C-25	IC401 ●	C-31
D425	B-6	IC501	D-10
D426	B-5	IC502	D-8
D502	C-11	IC503 ○	D-23
D503	C-11	IC503 ●	D-33
D504	C-9	IC601	D-6
D505	C-12	IC603	H-19
D506	C-11	IC604	J-19
D507	C-10	IC831	G-23
D508	B-10		
D601	E-6	Q501	C-8
D603	D-3	Q502	C-9
D604	E-3	Q601	E-5
D605	F-3	Q602	D-3
D606	G-3	Q603	D-3
D607	G-3	Q604	G-10
D608	D-3	Q605	E-3
D609	E-3	Q606	E-3
D610	F-3	Q607	F-3
D611	G-3	Q608	G-3
D612	G-3	Q609	H-3
D627	F-10	Q712	J-19

○ : (C50)
● : (C50U)

Note:

- o—— : parts extracted from the components side.
- ● : Through hole.
- ::::: : Pattern on the side which is seen.
- ::::: : Pattern of the rear side.

- CND : Canadian model
- G : German model
- IT : Italian model
- EE : East European model
- EA : Saudi Arabia model
- AUS : Australian model
- SP : Singapore model

7-13. PRINTED WIRING BOARD
• DISPLAY SECTION
• See page 32 for Circuit Boards Location and see page 97, 98 for Semiconductor Lead Layouts.

• Semiconductor Location

Ref. No.	Location	Ref. No.	Location
D421 ○	C-18	D881	I-6
D421 ●	C-28	D882	I-7
D422 ○	C-17	D883	I-9
C422 ●	C-27	D884	I-9
D423 ○	C-16	D885	I-10
D423 ●	C-26		
D424 ○	C-15	IC401 ○	C-21
D424 ●	C-25	IC401 ●	C-31
D425	B-6	IC501	D-10
D426	B-5	IC502	D-8
D502	C-11	IC503 ○	D-23
D503	C-11	IC503 ●	D-33
D504	C-9	IC601	D-6
D505	C-12	IC603	H-19
D506	C-11	IC604	J-19
D507	C-10	IC831	G-23
D508	B-10		
D601	E-6	Q501	C-8
D603	D-3	Q502	C-9
D604	E-3	Q601	E-5
D605	F-3	Q602	D-3
D606	G-3	Q603	D-3
D607	G-3	Q604	G-10
D608	D-3	Q605	E-3
D609	E-3	Q606	E-3
D610	F-3	Q607	F-3
D611	G-3	Q608	G-3
D612	G-3	Q609	H-3
D627	F-10	Q712	J-19

○ : (C50)
● : (C50U)

Note:
• o—— : parts extracted from the components side.
• ● : Through hole.
• ⁘⁘⁘ : Pattern on the side which is seen.

• CND : Canadian model
• G : German model
• IT : Italian model
• EE : East European model
• EA : Saudi Arabia model
• AUS : Australian model
• SP : Singapore model

7-14. PRINTED WIRING BOARD
- DECK SECTION (HCD-C50)
- See page 32 for Circuit Boards Location and see page 97, 98 for Semiconductor Lead Layouts.

- **Semiconductor Location**

Ref. No.	Location
D31	I-2
D201	E-16
D202	I-16
D203	I-16
D204	E-15
D205	D-15
D206	B-22
D207	I-24
D208	H-23
D302	B-11
D303	B-12
D304	C-6
D305	B-6
D307	B-1
D308	B-2
D309	B-7
D311	B-8
IC31A	I-9
IC31B	I-3
IC81A	F-11
IC81B	F-5
IC201	E-22
IC202	E-19
IC203	G-18
IC204	F-16
Q51	H-3
Q52	H-3
Q53	H-3
Q71A	I-11
Q71B	I-5
Q201	D-23
Q210	D-16
Q211	D-20
Q212	D-16
Q213	D-17
Q214	E-17
Q215	E-17
Q216	E-16
Q217	E-16
Q218	D-16
Q219	D-16
Q220	I-17
Q221	H-17
Q222	H-15
Q223	H-17
Q224	H-17
Q301	D-23

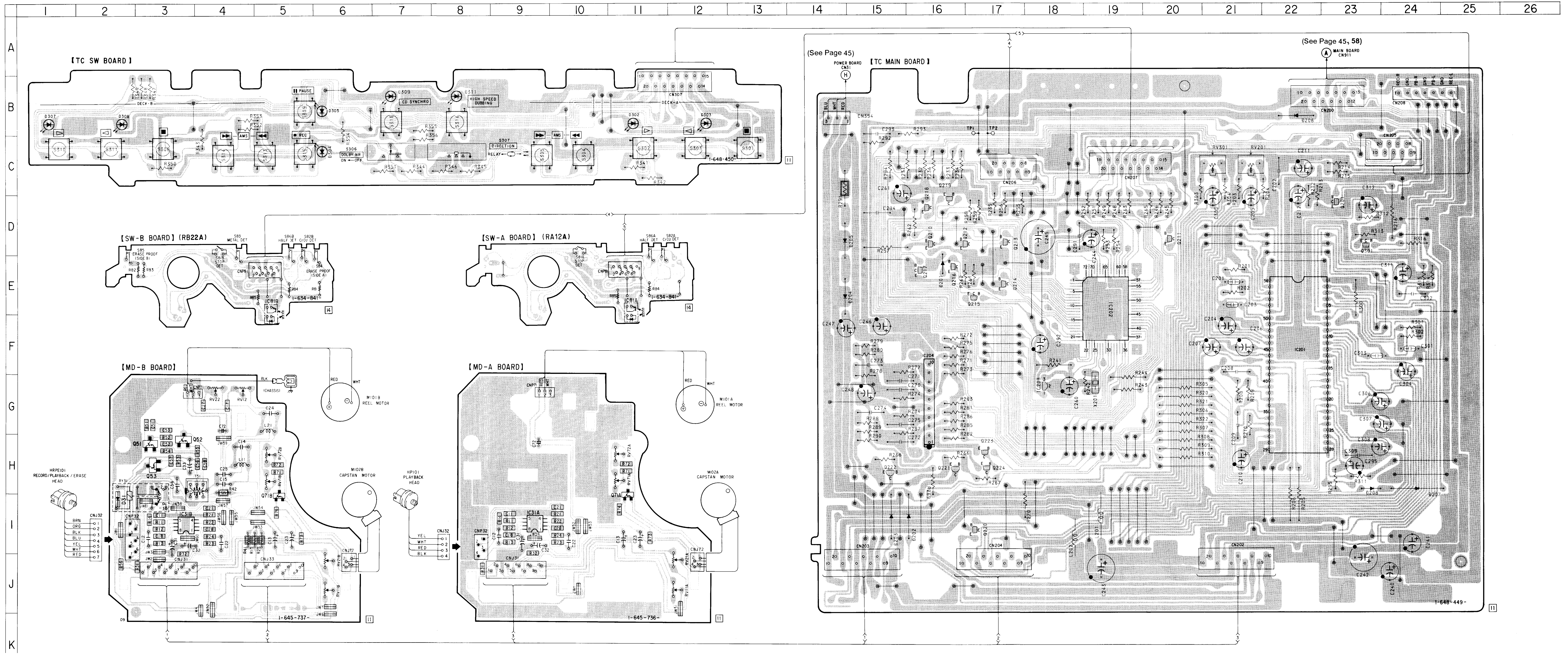

Note:
- ○—— : parts extracted from the components side.
- ░░░ : Pattern on the side which is seen.

7-15. SCHEMATIC DIAGRAM
• DECK SECTION (HCD-C50)

Note:
- All capacitors are in μF unless otherwise noted. pF:μμF 50WV or less are not indicated except for electrolytics and tantalums.
- All resistors are in Ω and 1/4W or less unless otherwise specified.
- Δ : internal component.
- [W] : nonflammable resistor.

Note:	Note:
The components identified by mark ⚠ or dotted line with mark ⚠ are critical for safety. Replace only with part number specified.	Les composants identifiés par une marque ⚠ sont critiques pour la sécurité. Ne les remplacer que par une pièce portant le numéro spécifié.

- ▬▬ : B+ Line
- ▪▪▪▪▪ : B– Line
- ▭ : adjustment for repair.
- Voltage and waveforms are dc with respect to ground under no-signal conditions.
  no mark : PB
  ( ) : REC
- Voltages are taken with a VOM (Input impedance 10Ω). Voltage variations may be noted due to normal production tolerances.
- Signal path.
  ⇒ : PB (DECK A)
  ▷ : PB (DECK B)
  ▷› : REC (DECK B)

7-16. SCHEMATIC DIAGRAM
• DECK SECTION (HCD-C50U)

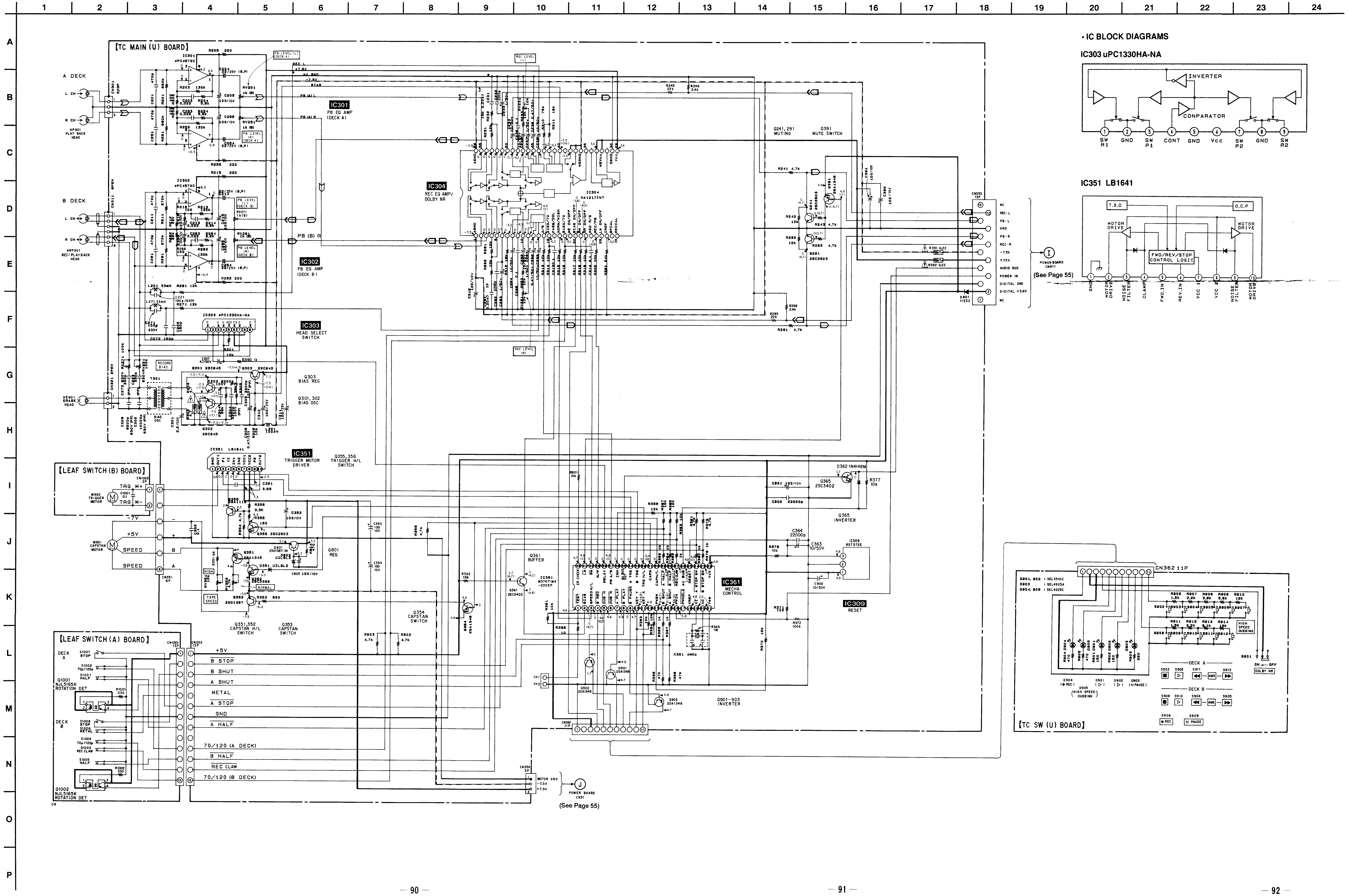

Note:
- All capacitors are in μF unless otherwise noted. pF:μμF 50WV or less are not indicated except for electrolytics and tantalums.
- All resistors are in Ω and 1/4W or less unless otherwise specified.
- △ : internal component.
- (fusible resistor symbol) : fusible resistor.

Note:	The components identified by mark ⚠ or dotted line with mark ⚠ are critical for safety. Replace only with part number specified.

- ▬▬▬ : B+ Line
- ■■■■■ : B– Line
- ▭ : adjustment for repair.
- Voltage and waveforms are dc with respect to ground under no-signal conditions.
  no mark : PB
  (   ) : REC
- Voltages are taken with a VOM (Input impedance 10Ω). Voltage variations may be noted due to normal production tolerances.
- Signal path.
  : PB (DECK A)
  : PB (DECK B)
  : REC (DECK B)

7-17. PRINTED WIRING BOARD

- DECK SECTION (HCD-C50U)
- See page 32 for Circuit Boards Location and see page 97, 98 for Semiconductor Lead Layouts.

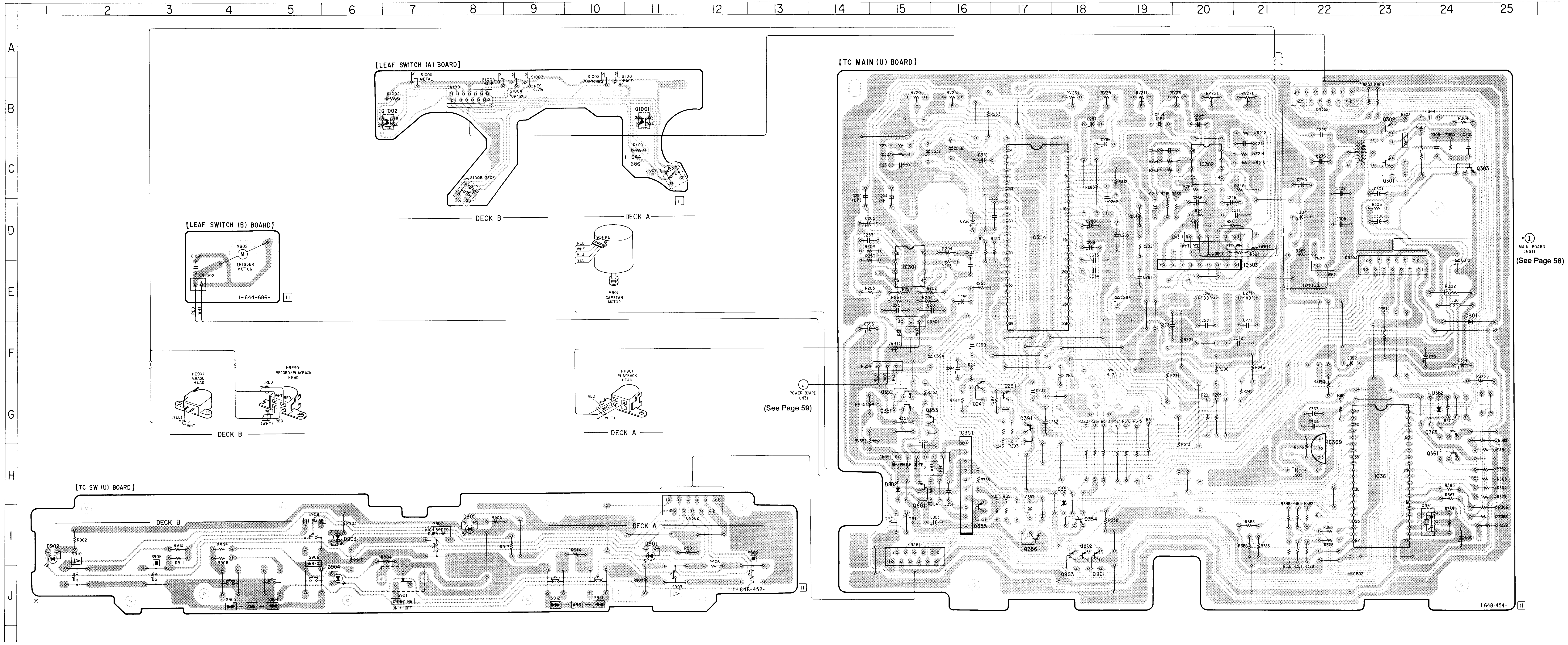

- **Semiconductor Location**

Ref. No.	Location
D351	I-18
D362	G-24
D801	F-24
D802	H-15
D901	I-11
D902	I-1
D903	I-6
D904	J-6
D905	I-8
IC301	E-15
IC302	C-20
IC303	E-20
IC304	D-18
IC309	H-22
IC351	H-16
IC361	H-23
Q241	G-16
Q291	G-17
Q301	C-23
Q302	B-23
Q303	C-24
Q351	G-15
Q352	G-15
Q353	G-16
Q354	I-18
Q355	I-16
Q356	I-17
Q361	H-24
Q365	H-24
Q391	G-17
Q801	I-15
Q901	J-19
Q902	J-18
Q903	J-18
Q1001	B-11
Q1002	B-7

Note:

- o—— : parts extracted from the components side.
- :::::: : Pattern on the side which is seen.
- △ : internal component.

7-18. SEMICONDUCTOR LEAD LAYOUTS

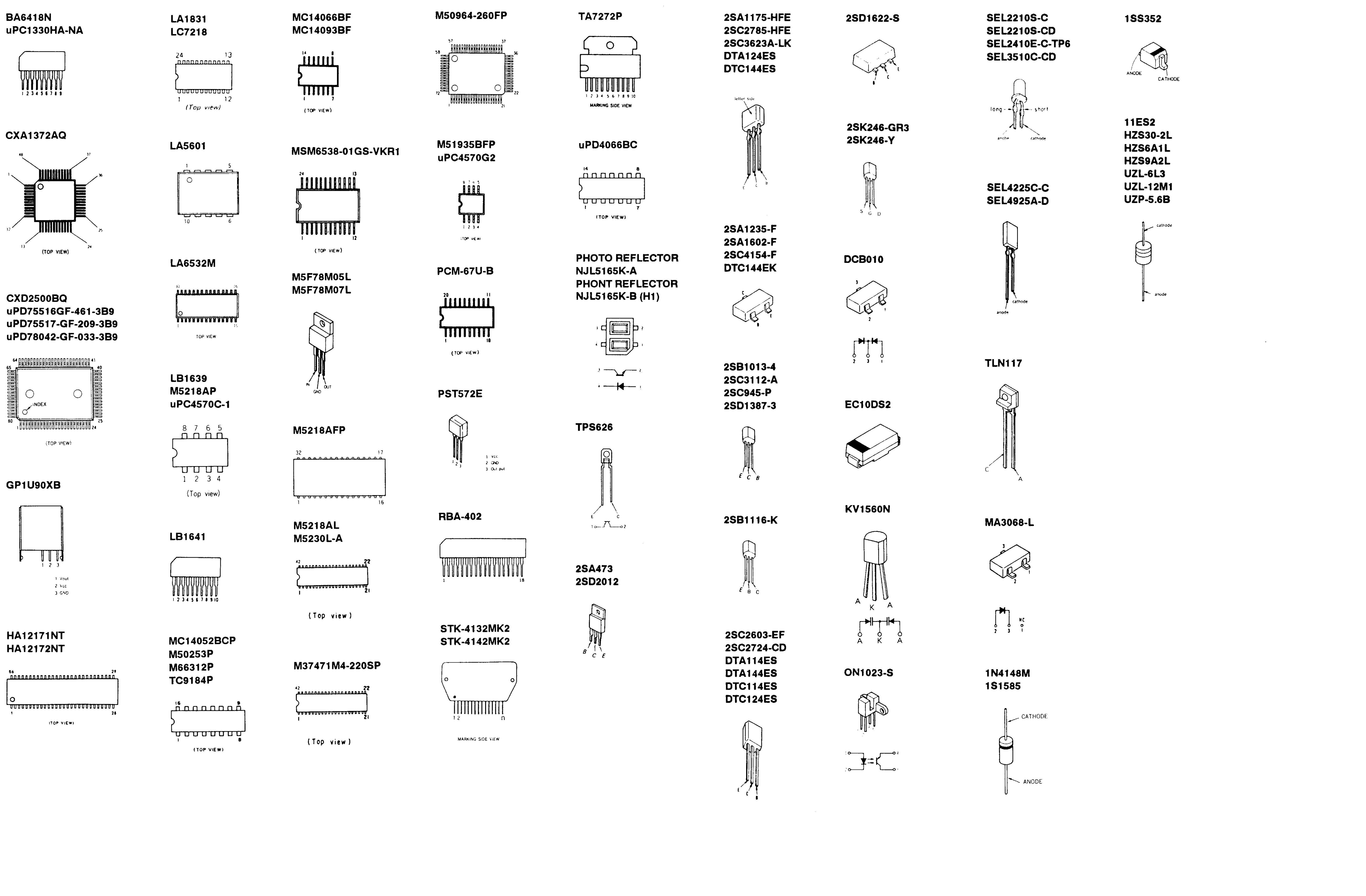

SECTION 8
EXPLODED VIEWS

NOTE:
- -XX, -X mean standardized parts, so they may have some difference from the original one.
- Color Indication of Appearance Parts
  Example:
  KNOB, BALANCE (WHITE) . . . (RED)
  ↑ Parts color ↑ Cabinet's color
- Hardware (# mark) list is given in the last of this parts list.
- Items marked " * " are not stocked since they are seldom required for routine service. Some delay should be anticipated when ordering these items.
- The mechanical parts with no reference number in the exploded views are not supplied.
- CND : Canadian model
- G : German model
- IT : Italian model
- EE : East European model
- EA : Saudi Arabia model
- AUS : Australian model
- SP : Singapore model

The components identified by mark ⚠ or dotted line with mark ⚠ are critical for safety.
Replace only with part number specified.

Les composants identifiés par une marque ⚠ sont critiques pour la sécurité.
Ne les remplacer que par une piéce portant le numéro spécifié.

8-1. CASE, POWER BOARD SECTION

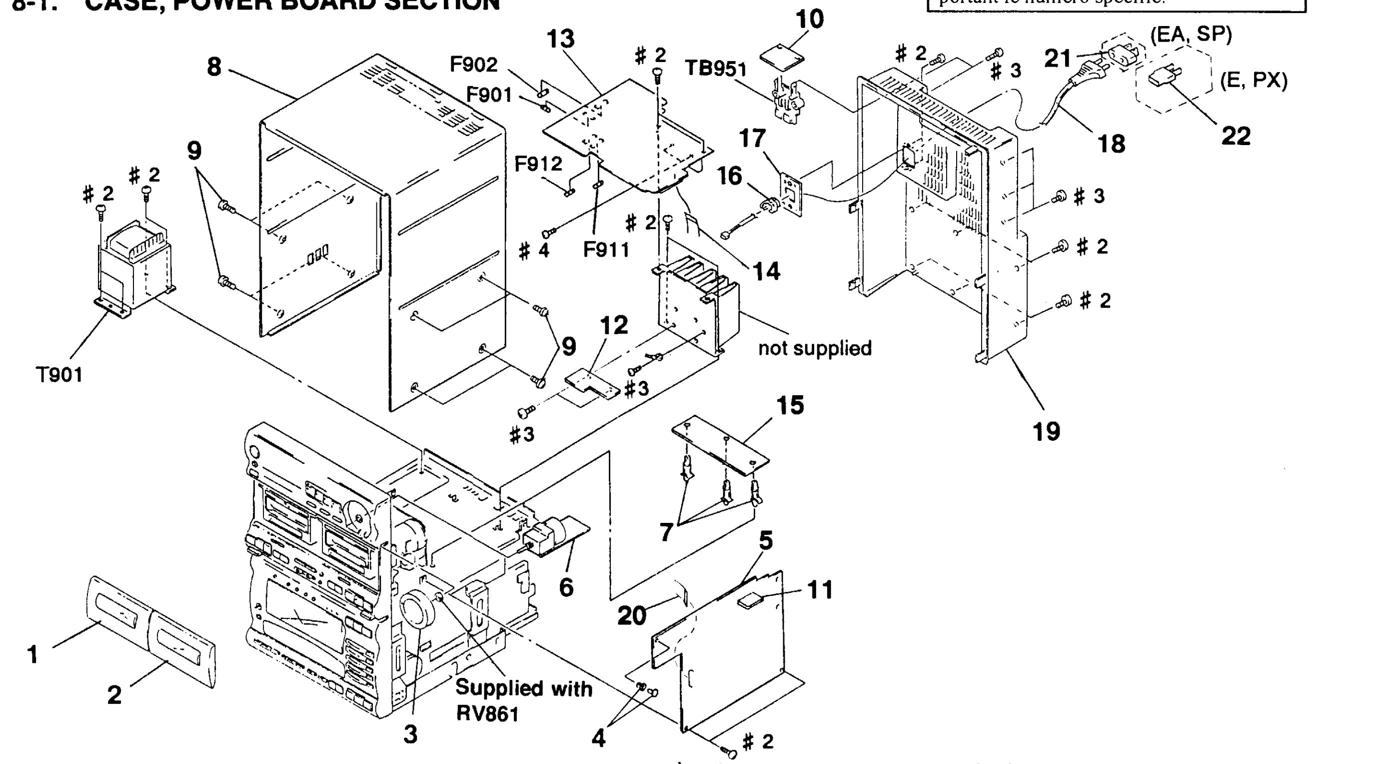

Ref. No.	Part No.	Description	Remark
1	X-4943-772-1	LID (L) ASSY, CASSETTE (C50U)	
1	X-4943-803-1	LID (L) ASSY, CASSETTE (C50)	
2	X-4943-773-1	LID (R) ASSY, CASSETTE (C50U)	
2	X-4943-802-1	LID (R) ASSY, CASSETTE (C50)	
3	X-4943-774-1	KNOB (VOLUME) ASSY	
4	4-812-134-00	RIVET NYLON, 3.5	
* 5	A-4360-827-A	MAIN BOARD, COMPLETE (C50:CND/C50U)	
* 5	A-4360-960-A	MAIN BOARD, COMPLETE (C50:IT, G)	
* 5	A-4360-964-A	MAIN BOARD, COMPLETE (C50:AEP, UK)	
* 5	A-4360-976-A	MAIN BOARD, COMPLETE (C50:E, EA, AUS, SP, PX)	
* 5	A-4365-148-A	MAIN BOARD, COMPLETE (C50:EE)	
* 6	1-648-412-11	VR BOARD	
* 7	4-954-051-51	HOLDER, PC BOARD	
* 8	4-959-242-01	CASE	
9	3-363-099-01	SCREW (CASE 3 TP2)	
* 10	1-648-413-11	ST. TM BOARD	
* 11	1-648-414-11	SW BOARD (C50:AEP, UK, IT, G, EE)	
* 12	1-648-807-11	TRANSISTOR BOARD	
* 13	A-4360-826-A	POWER BOARD, COMPLETE (C50U)	
* 13	A-4360-963-A	POWER BOARD, COMPLETE (C50:AEP, UK, IT, G, EE)	
* 13	A-4360-975-A	POWER BOARD, COMPLETE (C50:E, EA, SP, PX)	
* 13	A-4360-979-A	POWER BOARD, COMPLETE (C50:CND)	
* 13	A-4365-709-A	POWER BOARD, COMPLETE (C50:AUS)	
14	1-534-517-00	WIRE (FLAT TYPE) (13 CORE) (C50U)	
14	1-690-590-31	WIRE, FLAT TYPE (13 CORE) (C50)	
* 15	1-648-763-11	KARAOKE RELAY BOARD	
* 16	3-703-244-00	BUSHING (2104), CORD (C50:CND, AEP, UK, IT, G, EE, EA, AUS, SP/C50U)	

Ref. No.	Part No.	Description	Remark
* 16	3-703-571-11	BUSHING (S) (4516), CORD (C50:E, PX)	
* 17	4-959-236-01	BRACKET (C-H)	
⚠18	1-574-902-11	CORD, POWER (C50:E, PX)	
⚠18	1-590-083-11	CORD, POWER (C50:AUS)	
⚠18	1-696-169-11	CORD, POWER (AEP) (C50:AEP, IT, G, EE, EA, SP)	
⚠18	1-696-570-21	CORD, POWER (C50:UK)	
⚠18	1-751-586-11	CORD, POWER (C50:CND/C50U)	
* 19	4-959-239-01	PANEL, BACK (C50:CND/C50U)	
* 19	4-959-239-11	PANEL, BACK (C50:AEP, UK, IT, G, EE, AUS)	
* 19	4-959-239-21	PANEL, BACK (C50:E, EA, SP, PX)	
20	1-696-804-21	WIRE (FLAT TYPE) (19 CORE)	
⚠21	1-569-008-11	ADAPTER, CONVERSION 2P (C50:EA, SP)	
⚠22	1-569-007-11	ADAPTER, CONVERSION 2P (C50:E, PX)	
⚠F901	1-532-078-00	FUSE (T1A) (C50:E, EA, AUS, SP, PX)	
⚠F901	1-532-215-00	FUSE (T800mA) (C50:AEP, UK, IT, G, EE)	
⚠F901	1-576-103-11	FUSE (1.6A) (C50:CND/C50U)	
⚠F902	1-532-279-00	FUSE (T500mA) (C50:E, EA, SP, PX)	
⚠F911	1-532-203-00	FUSE (T2A) (C50:EXCEPT CND)	
⚠F911	1-576-104-11	FUSE (2A) (C50:CND/C50U)	
⚠F912	1-532-203-00	FUSE (T2A) (C50:EXCEPT CND)	
⚠F912	1-576-104-11	FUSE (2A) (C50:CND/C50U)	
⚠T901	1-423-710-11	TRANSFORMER, POWER (C50U)	
⚠T901	1-423-711-11	TRANSFORMER, POWER (C50:AEP, IT, G, EE)	
⚠T901	1-423-712-11	TRANSFORMER, POWER (C50:UK)	
⚠T901	1-423-713-11	TRANSFORMER, POWER (C50:E, EA, AUS, PX)	
⚠T901	1-423-752-11	TRANSFORMER, POWER (C50:SP)	
⚠T901	1-423-753-11	TRANSFORMER, POWER (C50:CND)	
* TB951	1-537-240-21	TERMINAL BOARD (CHECKER PIN) (SPEAKER)	

8-2. FRONT PANEL, PC BOARD SECTION

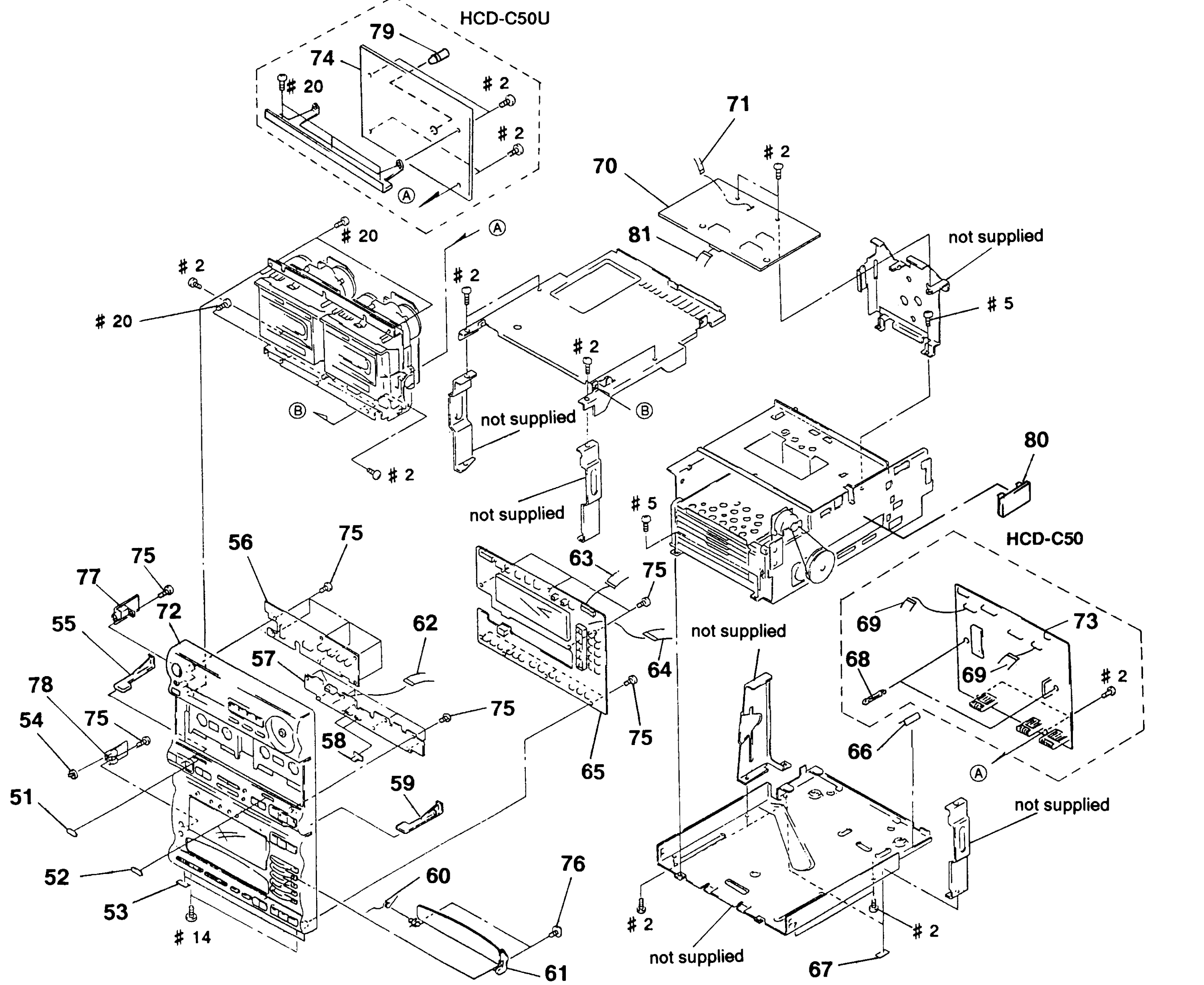

Ref. No.	Part No.	Description	Remark
51	4-959-222-01	LID (AZIMUTH L) (C50)	
52	4-959-221-01	LID (AZIMUTH R) (C50)	
53	4-930-336-11	FOOT (FELT)	
54	4-932-882-11	KNOB (HP. VOL) (C50:EXCEPT CND)	
55	4-959-210-01	BUTTON (EJECT-L)	
* 56	A-4360-951-A	FUNC BOARD, COMPLETE (C50U)	
* 56	A-4360-974-A	FUNC BOARD, COMPLETE (C50)	
* 57	A-4360-950-A	TC. SW BOARD, COMPLETE (C50U)	
* 57	A-4360-973-A	TC. SW BOARD, COMPLETE (C50)	
58	4-959-223-01	KNOB	
59	4-959-288-01	BUTTON (EJECT-R)	
60	4-959-207-01	SPRING (CLOSE)	
61	4-959-206-01	LID (LOADING)	
62	1-575-784-11	WIRE (FLAT TYPE) (11 CORE) (C50U)	
62	1-690-065-11	WIRE, FLAT TYPE (15 CORE) (C50)	
63	1-690-319-11	WIRE, FLAT TYPE (11 CORE)	
64	1-575-906-11	WIRE, FLAT TYPE (15 CORE)	
* 65	A-4360-946-A	DISPLAY BOARD, COMPLETE (C50:CND/C50U)	
* 65	A-4360-962-A	DISPLAY BOARD, COMPLETE (C50:G)	
* 65	A-4360-971-A	DISPLAY BOARD, COMPLETE (C50:AEP, UK)	
* 65	A-4360-978-A	DISPLAY BOARD, COMPLETE (C50:E, EA, AUS, SP, PX)	
* 65	A-4365-147-A	DISPLAY BOARD, COMPLETE (C50:IT)	

Ref. No.	Part No.	Description	Remark
* 65	A-4365-149-A	DISPLAY BOARD, COMPLETE (C50:EE)	
66	3-831-441-XX	CUSHION (B), CABINET	
67	4-930-336-21	FOOT (FELT) (C50:UK, IT, EE, EA, AUS, SP)	
67	4-930-336-31	FOOT (FELT) (C50:CND, AEP, G, E, PX/C50U)	
* 68	3-349-025-41	HOLDER, PC BOARD (C50:EXCEPT CND/C50U)	
* 68	3-350-847-41	HOLDER, PCB (C50:CND)	
69	1-696-725-11	WIRE (FLAT TYPE) (9 CORE) (C50)	
* 70	A-4360-947-A	CD. MAIN BOARD, COMPLETE	
71	1-590-209-11	WIRE (FLAT TYPE) (7 CORE)	
72	X-4943-768-1	PANEL ASSY, FRONT (C50U)	
72	X-4943-769-1	PANEL ASSY, FRONT (C50:CND)	
72	X-4943-770-1	PANEL ASSY, FRONT (C50:AEP, UK, IT, G, EE)	
72	X-4943-771-1	PANEL ASSY, FRONT (C50:E, EA, AUS, SP, PX)	
* 73	A-4360-972-A	TC. MAIN BOARD, COMPLETE (C50)	
* 74	A-4360-949-A	TC. MAIN BOARD, COMPLETE (C50U)	
75	4-951-620-01	SCREW (2.6X8), +BVTP	
76	4-933-134-01	SCREW (+PTPWH M2.6X6)	
* 77	1-648-416-11	HP BOARD	
* 78	1-648-415-11	MIC BOARD (C50:EXCEPT CND)	
79	4-962-265-01	HOLDER, PC BOARD (EXCEPT PX/C50U)	
80	4-962-178-01	HOLDER (FLEXIBLE)	
81	1-696-727-11	WIRE (FLAT TYPE) (15 CORE)	

8-3. CASSETTE HOLDER SECTION

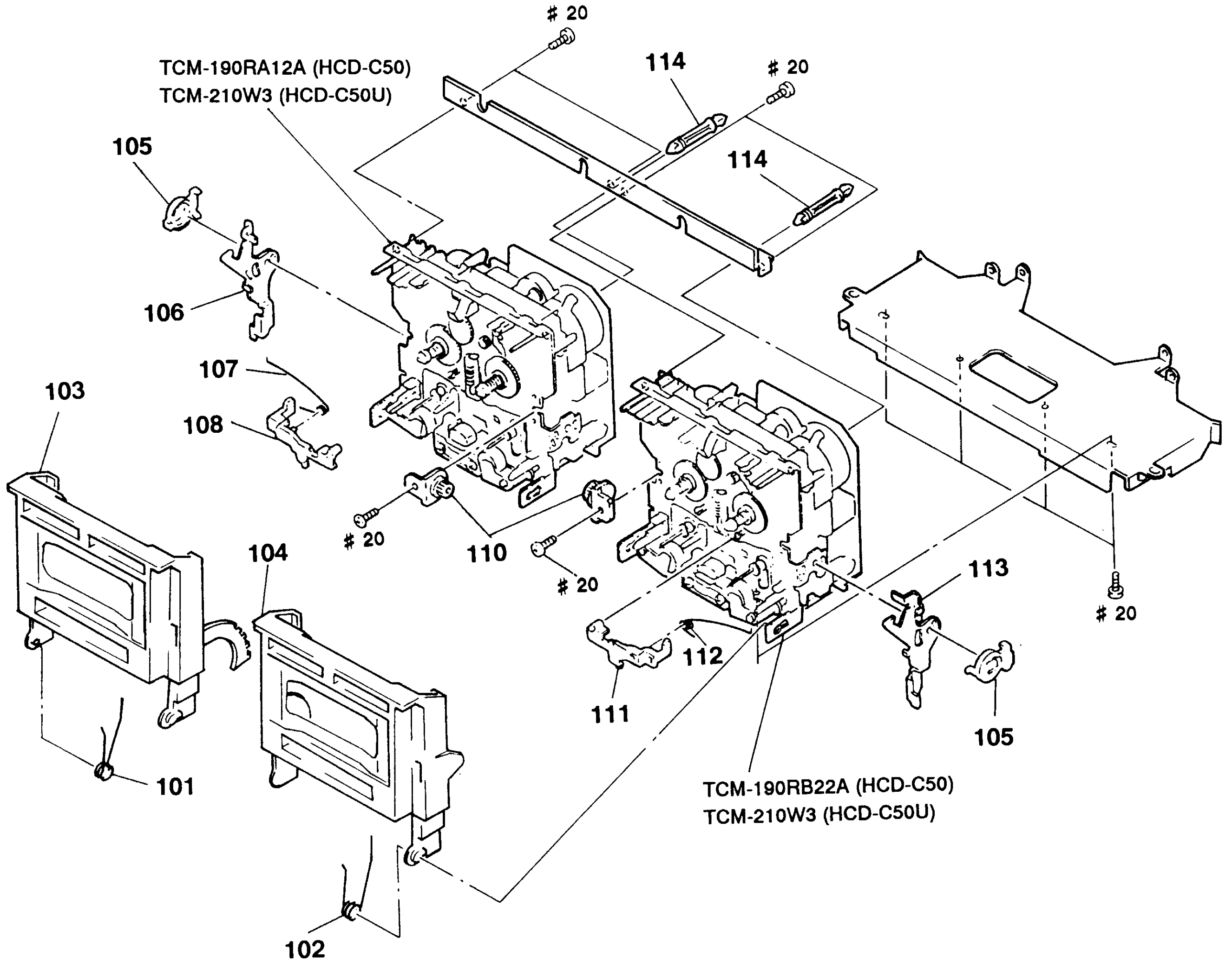

Ref. No.	Part No.	Description	Remark
101	4-959-231-01	SPRING (L), TORSION (C50)	
102	4-959-232-01	SPRING (R), TORSION (C50)	
103	X-4943-776-1	HOLDER (L) ASSY, CASSETTE (C50)	
104	X-4943-775-1	HOLDER (R) ASSY, CASSETTE (C50)	
105	3-354-957-01	JOINT (LOCK LEVER)	
* 106	3-367-709-01	LEVER (LOCK LEVER L)	
107	3-354-961-01	SPRING (EJ SAFTY SPRING L)(C50)	
108	3-354-955-01	LEVER (EJ SAFTY LEVER L)(C50)	
110	3-354-963-01	DAMPER (C50)	
111	3-354-956-01	LEVER (EJ SAFTY LEVER R)(C50)	
112	3-354-962-01	SPRING (EJ SAFTY SPRING R)(C50)	
* 113	3-367-710-01	LEVER (LOCK LEVER R)	
* 114	3-682-419-21	HOLDER, P.C.B (C50)	

8-4. MECHANISM DECK SECTION 1 (HCD-C50)
(DECK A: TCM-190RA12A/DECK B: TCM-190RB22A)

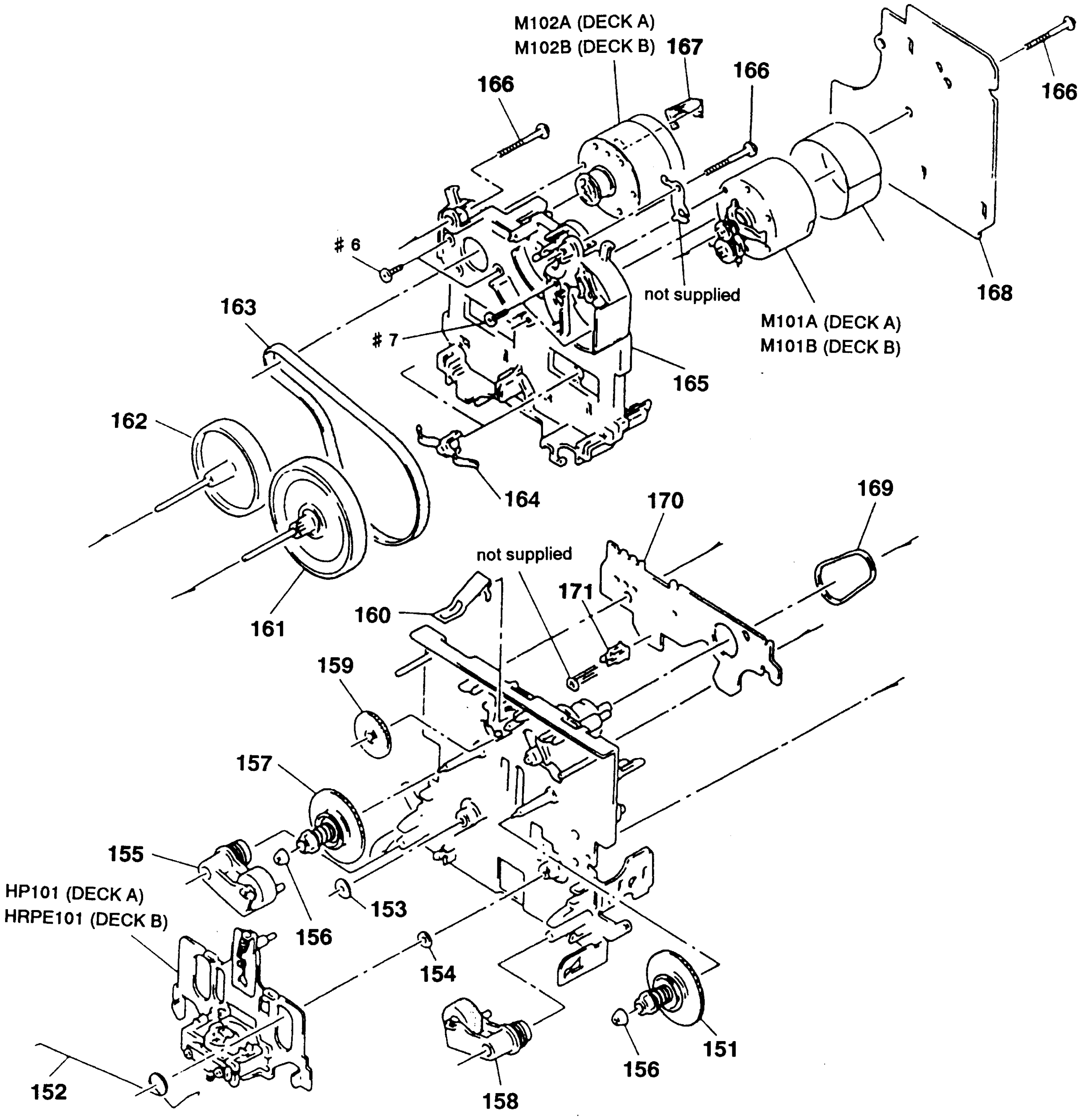

Ref. No.	Part No.	Description	Remark
151	X-3359-404-1	TABLE ASSY, REEL (C50)	
152	3-359-455-01	SPRING, TORSION (C50)	
153	3-356-714-01	WASHER (C50)	
154	3-356-713-01	WASHER (C50)	
155	X-3359-409-1	LEVER (PINCH LEVER REV) ASSY (C50)	
156	3-362-308-01	CAP (REEL)(C50)	
157	X-3362-078-1	TABLE ASSY (B), REEL (C50)	
158	X-3359-408-1	LEVER (PINCH LEVER FWD) ASSY (C50)	
159	3-359-424-01	GEAR (REV GEAR)(C50)	
160	3-359-430-01	SPRING(CASSETTE RETAINER),LEAF (C50)	
161	X-3359-406-1	FLYWHEEL (FWD) ASSY (C50)	
162	X-3359-410-1	FLYWHEEL (REV) ASSY (C50)	
163	3-359-417-01	BELT (FLAT), CAPSTAN (C50)	
164	3-575-321-00	RETAINER, THRUST, CAPSTAN (C50)	
* 165	3-359-436-01	BASE (THRUST RETAINER),FITTING (C50)	

Ref. No.	Part No.	Description	Remark
166	3-359-414-01	SCREW (+PTPWH 2X23)(C50)	
167	1-638-983-11	MOTOR FLEXIBLE BOARD (C50)	
* 168	A-2006-399-A	MD-A BOARD, COMPLETE (C50)	
* 168	A-2006-400-A	MD-B BOARD, COMPLETE (C50)	
169	3-359-466-01	BELT (FR), SQUARE (C50)	
170	1-634-841-14	SW-A BOARD (RA12A)(C50)	
170	1-634-841-14	SW-B BOARD (RB22A)(C50)	
HP101	A-2003-837-F	DECK ASSY, HEAD (DECK A)(C50)	
HRPE101	A-2003-838-F	DECK ASSY, HEAD (DECK B)(C50)	
M101A	X-3363-501-1	MOTOR, REEL ASSY (DECK A)(C50)	
M101B	X-3363-501-1	MOTOR, REEL ASSY (DECK B)(C50)	
M102A	X-3365-377-1	MOTOR, CAPSTAN ASSY (DECK A)(C50)	
M102B	X-3365-377-1	MOTOR, CAPSTAN ASSY (DECK B)(C50)	

8-5. MECHANISM DECK SECTION 2 (HCD-C50)
(DECK A: TCM-190RA12A/DECK B: TCM-190RB22A)

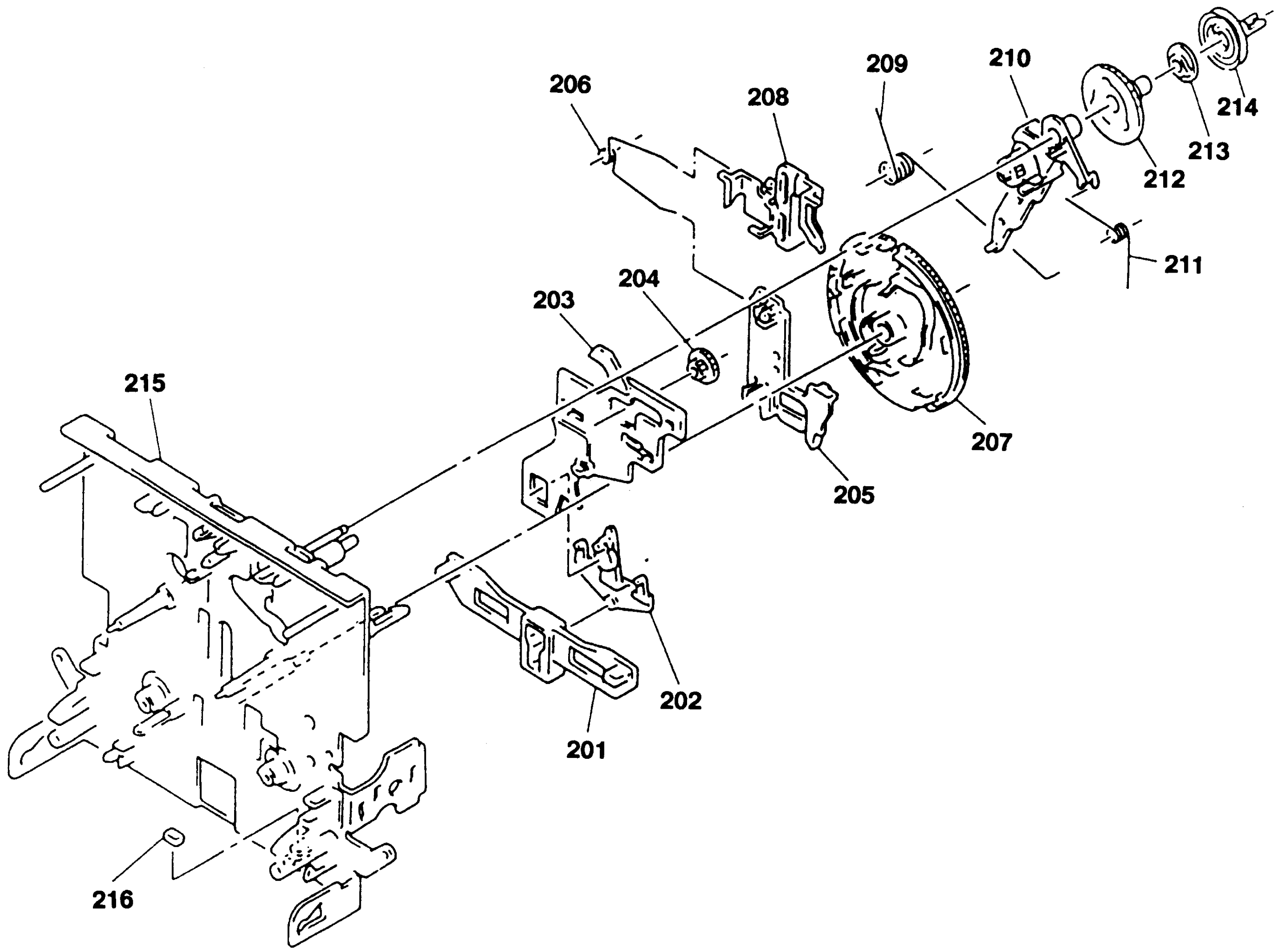

Ref. No.	Part No.	Description	Remark
* 201	3-359-425-01	SLIDER (REVERSE SLIDER) (C50)	
202	3-359-426-01	LEVER (REVERSE LEVER) (C50)	
* 203	3-359-415-01	SLIDER (TRIGGER SLIDER) (C50)	
204	3-359-448-01	GEAR (TRIGGER) (C50)	
* 205	3-359-427-01	SLIDER (LEVERSE SLIDER) (C50)	
206	3-359-454-01	SPRING, TORSION (C50)	
207	3-359-420-01	GEAR (CAM GEAR) (C50)	
208	3-359-429-01	SLIDER (BRAKE PLATE) (C50)	
209	3-359-456-01	SPRING(TRIGGER SPRING), TORSION (C50)	
210	X-3359-405-1	LEVER (FR ARM) ASSY (C50)	
211	3-359-453-01	SPRING (FR ARM), TORSION (C50)	
212	3-359-419-01	GEAR (FR GEAR) (C50)	
213	3-359-421-01	CLUTCH (REEL DISK) (C50)	
214	3-359-418-01	PULLEY (FR PULLEY) (C50)	
215	X-3363-790-1	CHASSIS, MECHANICAL ASSY (C50)	
216	3-359-469-01	SPACER (C50)	

8-6. MECHANISM DECK SECTION 3 (HCD-C50U) (TCM-210W3)

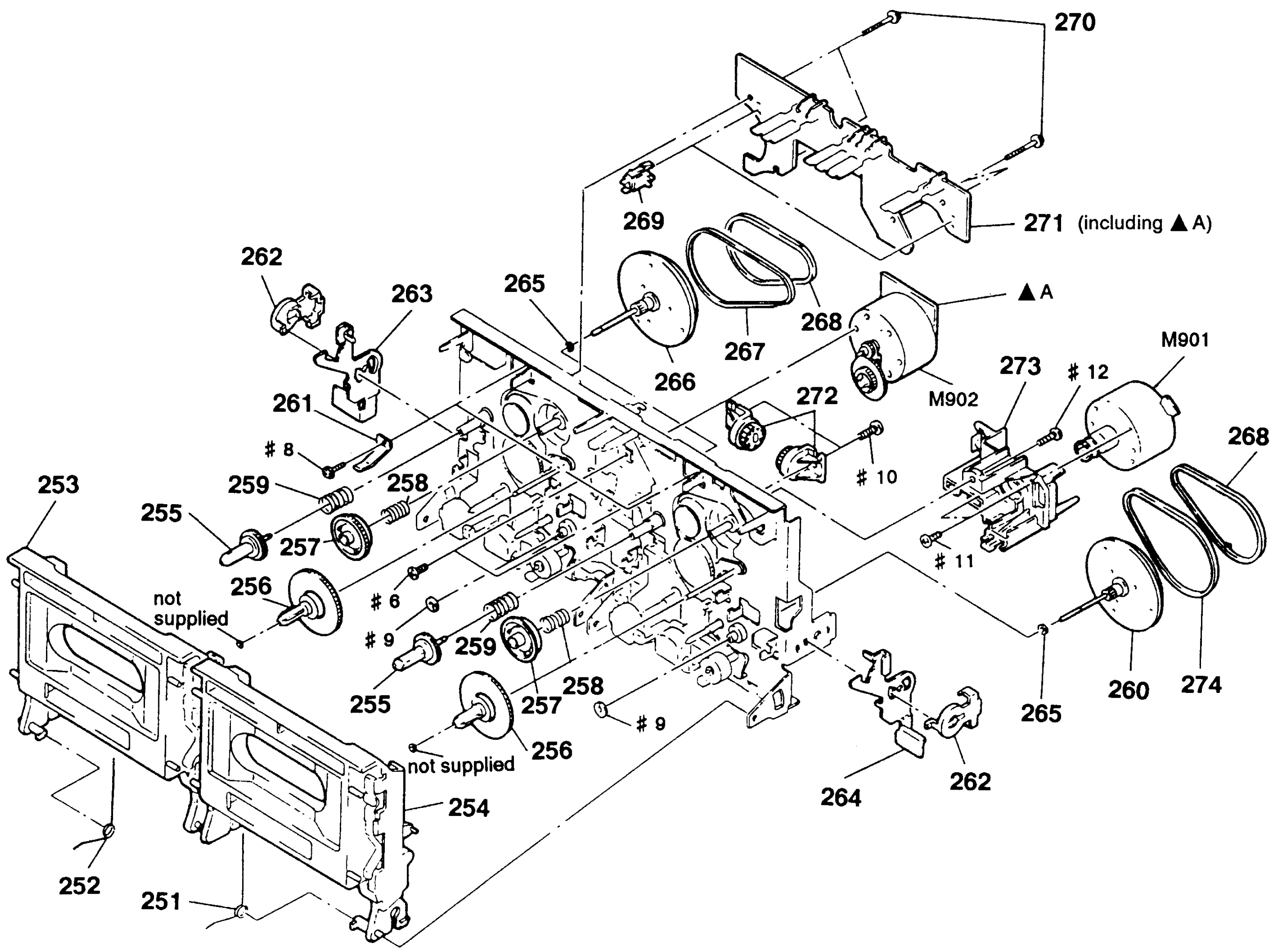

Ref. No.	Part No.	Description	Remark
251	3-381-788-01	SPRING (LOADING B), TORSION (C50U)	
252	3-381-787-01	SPRING (LOADING A), TORSION (C50U)	
253	X-3365-440-1	HOLDER (A) ASSY, CASSETTE (C50U)	
254	X-3365-441-1	HOLDER (B) ASSY, CASSETTE (C50U)	
255	3-382-524-01	GEAR (S SIDE REEL)(C50U)	
256	X-3365-559-1	TABLE (T) ASSY, REEL (C50U)	
257	X-3365-447-1	GEAR (FF) ASSY (C50U)	
258	3-382-078-01	SPRING (FF), COMPRESSION (C50U)	
259	3-358-208-01	SPRING (SUPPLY), COMPRESSION (C50U)	
260	X-3365-438-1	FLYWHEEL (B) ASSY (C50U)	
261	3-382-929-01	SPRING(CASSETTE DETENT), LEAF (C50U)	
262	3-354-957-01	JOINT (LOCK LEVER)	
* 263	3-367-709-01	LEVER (LOCK LEVER L)	
* 264	3-367-710-01	LEVER (LOCK LEVER R)	
265	3-701-437-21	WASHER (C50U)	
266	X-3365-437-1	FLYWHEEL (A) ASSY (C50U)	
267	3-382-859-02	BELT (CAPSTAN A)(C50U)	
268	4-928-951-01	BELT (CAPSTAN)(C50U)	
269	3-381-776-01	HOLDER (LED)(C50U)	
270	3-355-801-01	SCREW (BTP 2X18)(C50U)	
* 271	1-644-686-21	LEAF SWITCH BOARD (A, B)(C50U)	
272	4-919-393-31	DAMPER (C50U)	
273	3-381-777-01	BRACKET (C50U)	
274	3-382-860-02	BELT (CAPSTAN B)(C50U)	
M901	X-3362-377-1	MOTOR (WH) ASSY (CAPSTAN)(C50U)	
M902	A-2004-188-A	MOTOR ASSY, DC (TRIGGER)(C50U)	

8-7. MECHANISM DECK SECTION 4 (HCD-C50U) (TCM-210W3)

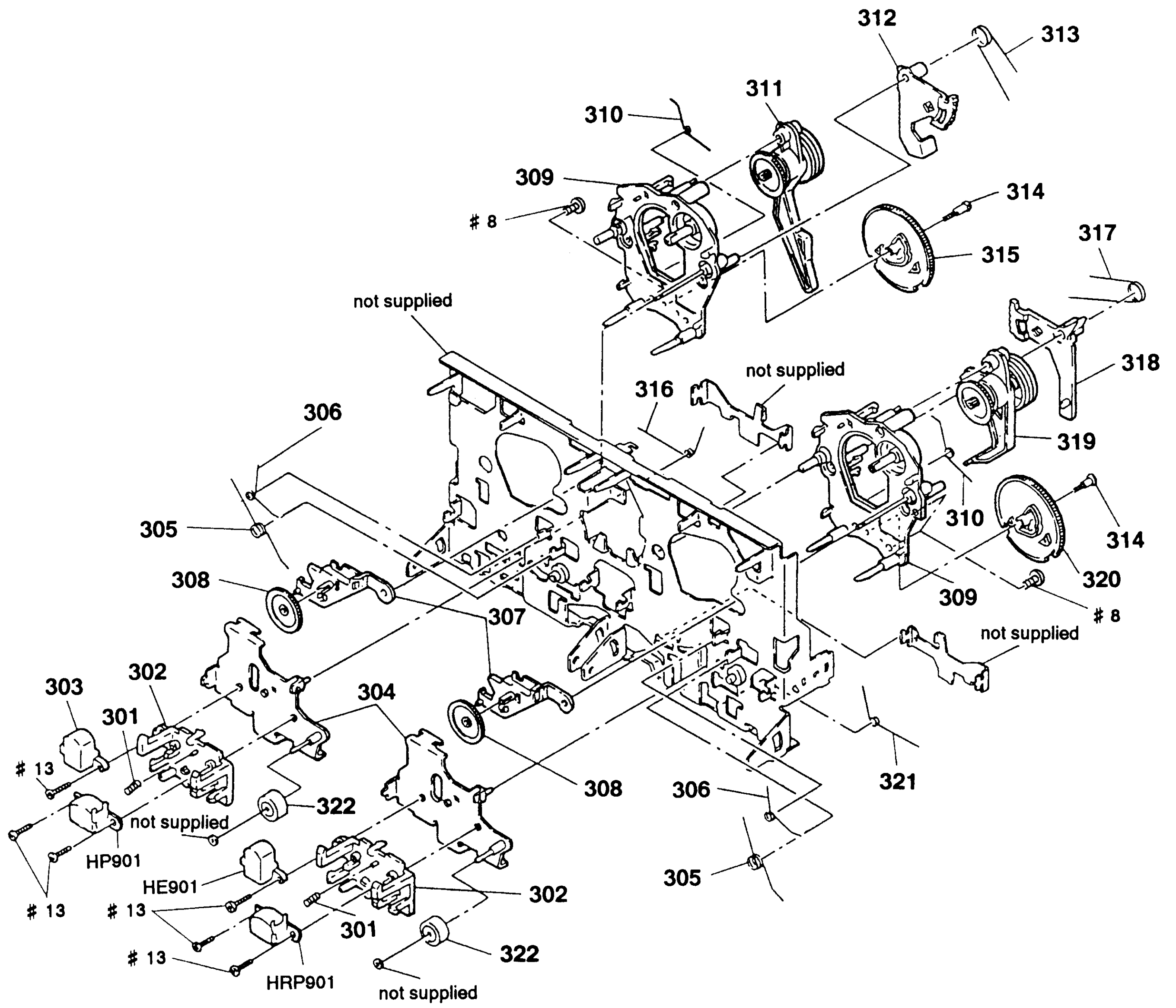

Ref. No.	Part No.	Description	Remark
301	3-343-484-01	SPRING, COMPRESSION (C50U)	
302	3-381-778-01	HOLDER (HEAD) (C50U)	
303	3-319-716-01	GUIDE, TAPE (C50U)	
304	X-3365-814-1	SLIDER (HEAD) ASSY (C50U)	
305	3-382-076-01	SPRING (HEAD), TORSION (C50U)	
306	3-382-077-01	SPRING (TU), TORSION (C50U)	
307	3-381-785-01	LEVER (TU) (C50U)	
* 308	3-358-284-01	GEAR (TU GEAR) (C50U)	
* 309	X-3365-443-1	CHASSIS (M) ASSY (C50U)	
310	3-383-498-01	SPRING (CAM), TORSION (C50U)	
311	X-3365-444-1	LEVER (FR ARM A) ASSY (C50U)	
312	3-381-781-01	LEVER (TRIGGER A) (C50U)	
313	3-382-074-01	SPRING (TRIGGER A), TORSION (C50U)	
314	3-381-810-01	SCREW, STEP (C50U)	
315	3-381-779-01	CAM (A) (C50U)	
316	3-383-056-02	SPRING (SLIDER A), TORSION (C50U)	
317	3-382-075-01	SPRING (TRIGGER B), TORSION (C50U)	
318	3-381-782-01	LEVER (TRIGGER B) (C50U)	
319	X-3365-445-1	LEVER (FR ARM B) ASSY (C50U)	
320	3-381-780-01	CAM (B) (C50U)	
321	3-383-057-02	SPRING (SLIDER B), TORSION (C50U)	
322	3-355-808-21	PINCH ROLLER (C50U)	
HE901	1-543-673-11	HEAD, MAGNETIC (ERASE) (C50U)	
HP901	1-543-940-11	HEAD, MAGNETIC (PLAYBACK) (C50U)	
HRP901	1-543-319-11	HEAD, MAGNETIC (REC/PB) (C50U)	

8-8. CD MECHANISM SECTION 1 (CDM23B-5BD3)

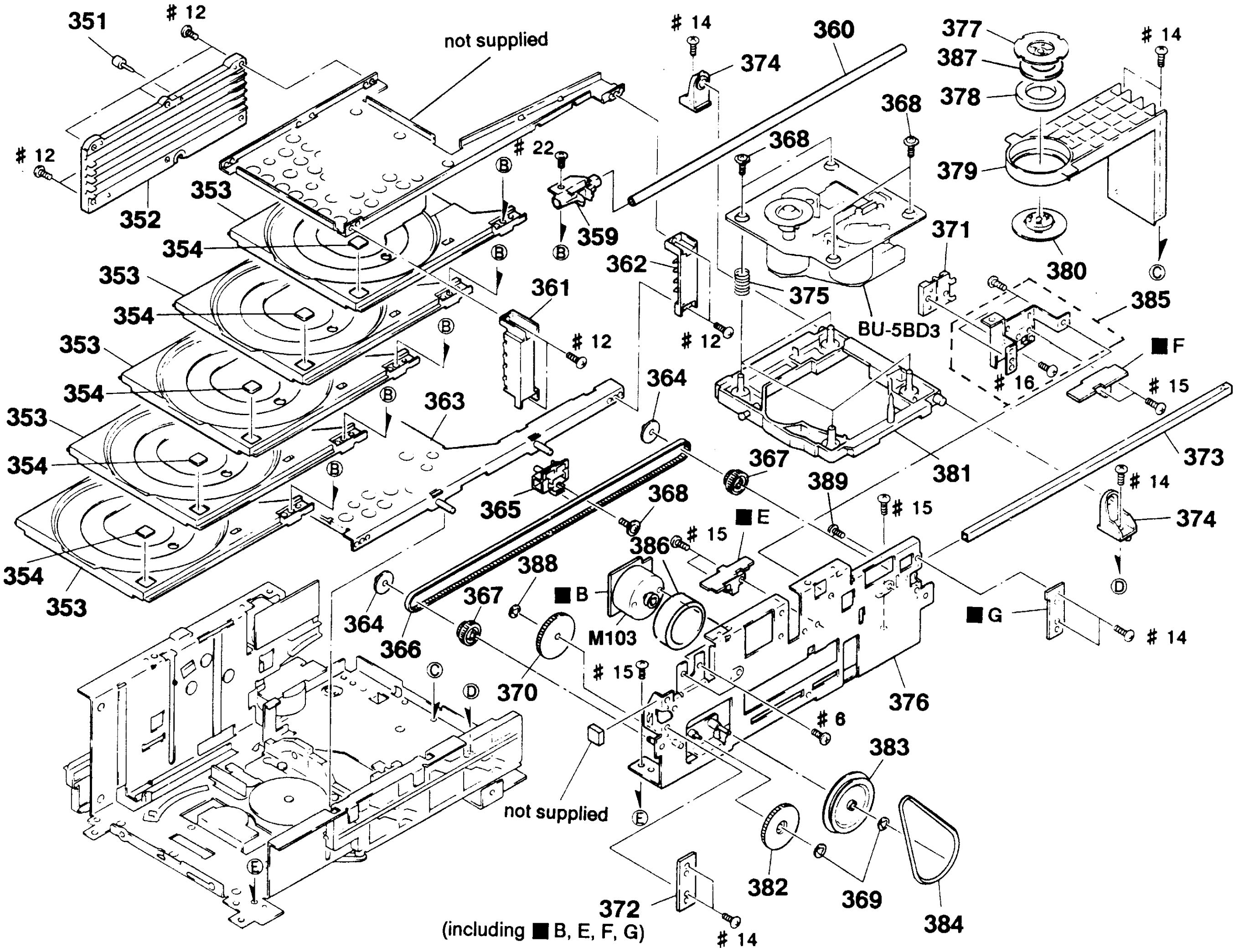

Ref. No.	Part No.	Description	Remark
351	4-954-649-01	SHAFT (ST-L)	
352	4-954-644-01	BRACKET (STOCKER L)	
353	4-954-638-01	TABLE, DISK	
354	4-954-651-01	EMBLEM (TABLE)	
355	4-954-651-11	EMBLEM (TABLE)	
356	4-954-651-21	EMBLEM (TABLE)	
357	4-954-651-31	EMBLEM (TABLE)	
358	4-954-651-41	EMBLEM (TABLE)	
359	4-954-639-01	GUIDE (TB)	
* 360	4-954-648-01	SHAFT (TABLE GUIDE)	
361	4-954-645-01	GUIDE (ST-RF)	
362	4-954-646-01	GUIDE (ST-RR)	
* 363	X-4942-943-1	BRACKET (ST-B) ASSY	
364	4-954-628-01	FLANGE (PULLEY)	
365	4-954-630-01	SLIDER (TB)	
366	4-954-634-01	BELT (SL)	
367	4-954-629-01	PULLEY (SL)	
368	4-933-134-01	SCREW (+PTPWH M2.6X6)	
369	3-669-595-00	WASHER (2), STOPPER	
370	4-954-627-01	GEAR (SL)	
* 371	4-954-621-01	STOPPER (TB)	
* 372	1-645-607-11	CDM MOTOR BOARD (A-H)	
* 373	4-954-631-01	SHAFT (SL GUIDE)	
* 374	4-954-623-01	FULCRUM (BU)	
375	4-955-575-01	SPRING (BU), COMPRESSION	
* 376	X-4942-941-1	BRACKET (SL-A) ASSY	
377	4-929-762-01	YOKE, CHUCKING	
378	1-452-676-11	MAGNET	
379	4-954-650-01	HOLDER (MG)	
380	4-955-230-01	PULLEY (CHUCKING)	
* 381	X-4942-942-1	HOLDER (BU) ASSY	
382	4-954-625-01	GEAR (CDM)	
383	3-372-516-01	PULLEY (LOADING)	
384	4-954-624-01	BELT (CDM)	
* 385	A-4660-264-A	BRACKET (SL-B) ASSY	
* 386	3-162-496-01	CORE, SHIELD	
387	4-955-231-01	SPACER (MG)	
388	3-558-708-21	WASHER, STOPPER	
389	4-955-890-01	SCREW (3X6)	
M103	A-4660-232-A	MOTOR (CDM) ASSY (LOADING)	

8-9. CD MECHANISM SECTION 2 (CDM23B-5BD3)

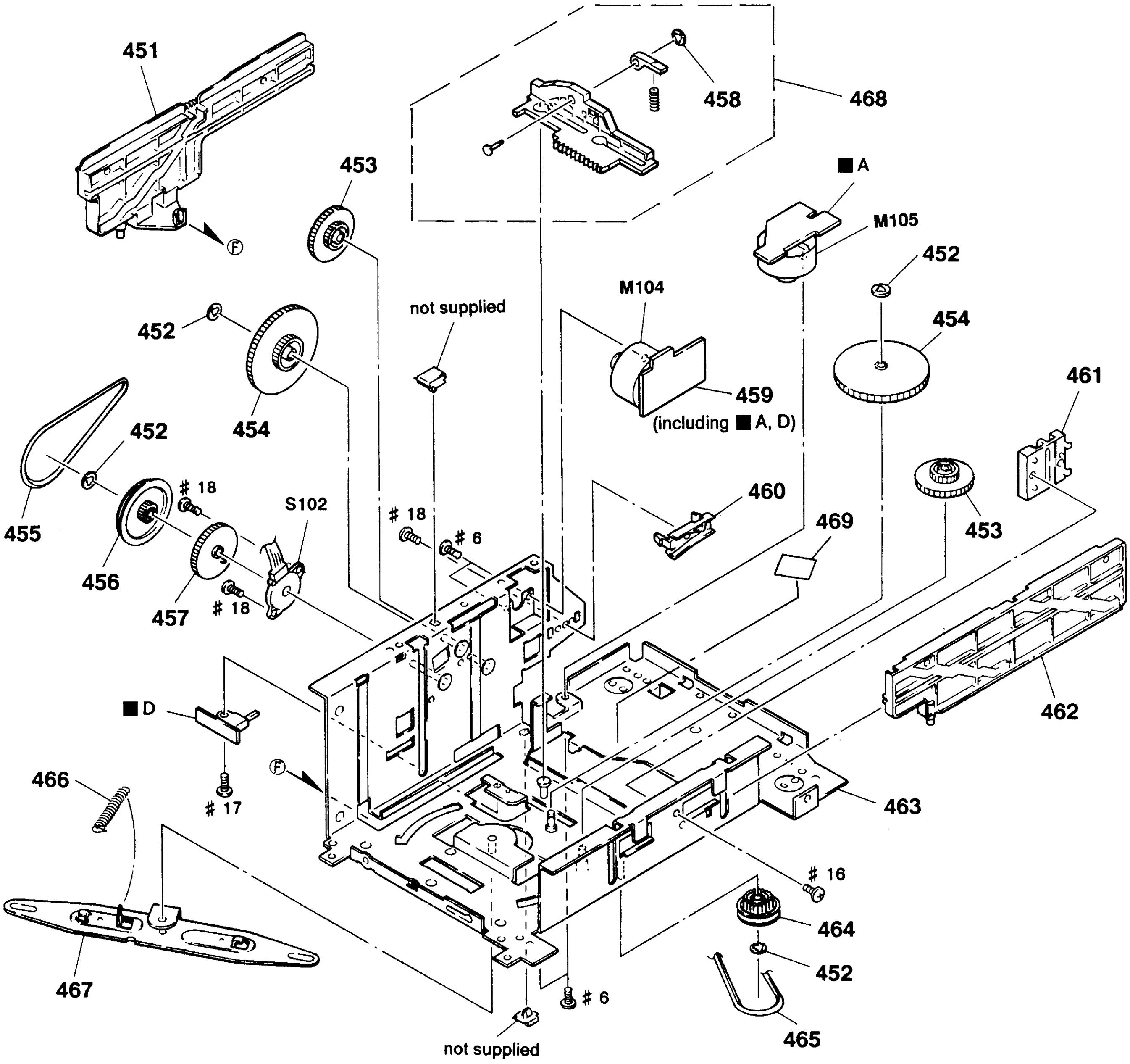

Ref. No.	Part No.	Description	Remark
451	X-4942-939-1	SLIDER (ST-L) ASSY	
452	3-558-708-21	WASHER, STOPPER	
453	4-954-625-01	GEAR (CDM)	
454	3-372-517-01	GEAR (LOADING)	
455	4-954-624-01	BELT (CDM)	
456	3-372-516-01	PULLEY (LOADING)	
457	4-954-636-01	GEAR (E)	
458	3-681-678-00	WASHER, SLIT	
* 459	1-645-607-11	CDM MOTOR BOARD (A-H)	
* 460	4-954-633-01	GUIDE (TB-LR)	
* 461	4-954-621-01	STOPPER (TB)	

Ref. No.	Part No.	Description	Remark
462	X-4942-940-1	SLIDER (ST-R) ASSY	
* 463	X-4942-937-1	CHASSIS (CDM) ASSY	
464	4-954-637-01	PULLEY (BU)	
465	4-954-635-01	BELT (BU)	
466	4-955-168-01	SPRING, TENSION	
* 467	4-954-632-02	LEVER (JOINT)	
468	A-4660-167-A	SLIDER (BU CAM) ASSY	
469	4-928-473-01	INSULATOR	
M104	A-4660-232-A	MOTOR (CDM) ASSY (UP/DOWN)	
M105	A-4660-232-A	MOTOR (CDM) ASSY (CLAMP)	
S102	1-466-819-11	ENCODER, ROTARY	

8-10. OPTICAL PICK-UP SECTION (BU-5BD3)

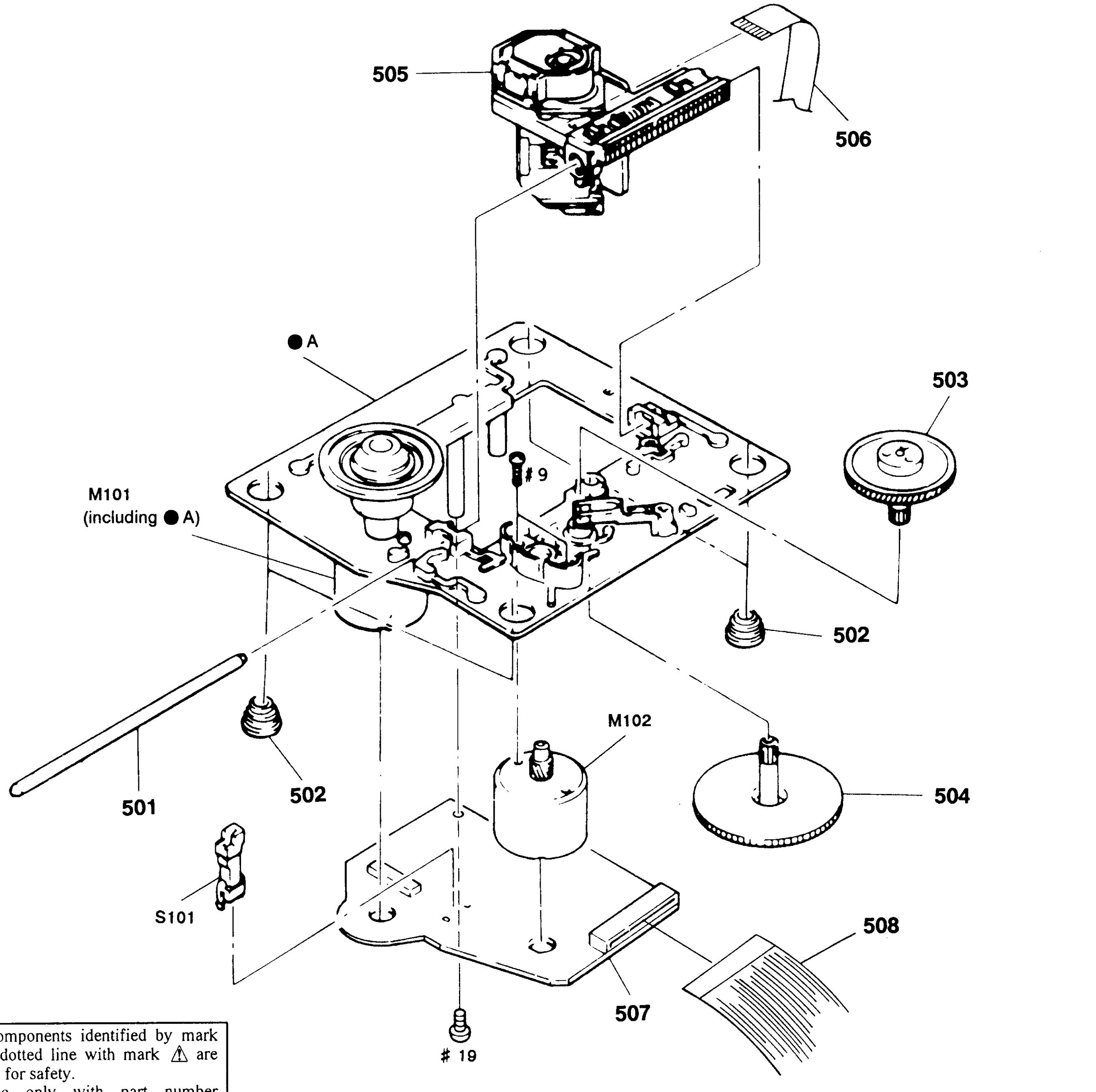

The components identified by mark ⚠ or dotted line with mark ⚠ are critical for safety. Replace only with part number specified.
Les composants identifiés par une marque ⚠ sont critiques pour la sécurité. Ne les remplacer que par une piéce portant le numéro spécifié.

Ref. No.	Part No.	Description	Remark
501	4-917-565-01	SHAFT, SLED	
502	4-933-126-01	INSULATOR (A)	
503	4-917-567-01	GEAR (M)	
504	4-917-564-01	GEAR (P), FLATNESS	
⚠505	8-848-144-11	DEVICE, OPTICAL KSS-240A	
506	1-575-001-11	WIRE, FLAT TYPE (12 CORE)	
* 507	A-4617-371-A	BD BOARD, COMPLETE	
508	1-751-597-11	WIRE (FLAT TYPE)(22 CORE)	
M101	X-4917-523-3	MOTOR ASSY, DISK (SPINDLE)	
M102	X-4917-504-1	MOTOR ASSY (SLED)	
S101	1-572-085-11	SWITCH LEAF (LIMIT)	

SECTION 9
ELECTRICAL PARTS LIST

BD

NOTE:

The components identified by mark ⚠ or dotted line with mark ⚠ are critical for safety.
Replace only with part number specified.

Les composants identifiés par une marque ⚠ sont critiques pour la sécurité.
Ne les remplacer que par une piéce portant le numéro spécifié.

When indicating parts by reference number, please include the board name.

- Due to standardization, replacements in the parts list may be different from the parts specified in the diagrams or the components used on the set.
- -XX, -X mean standardized parts, so they may have some difference from the original one.
- RESISTORS
  All resistors are in ohms
  METAL: Metal-film resistor
  METAL OXIDE: Metal Oxide-film resistor
  F : nonflammable
- CND : Canadian model
- G : German model
- IT : Italian model
- EE : East European model
- EA : Saudi Arabia model
- AUS : Australian model
- SP : Singapore model

- Items marked "*" are not stocked since they are seldom required for routine service. Some delay should be anticipated when ordering these items.
- Color Indication of Appearance Parts Example:
  KNOB, BALANCE (WHITE) . . . (RED)
  ↑ Parts color ↑ Cabinet's color
- SEMICONDUCTORS
  In each case, u: μ, for example:
  uA...: μA..., uPA...: μPA...,
  uPB...: μPB..., uPC...: μPC...,
  uPD...: μPD...
- CAPACITORS
  uF : μF
- COILS
  uH : μH
- Hardware (# mark) list is given in the last of this parts list.

Ref. No.	Part No.	Description				Remark
*	A-4617-371-A	BD BOARD, COMPLETE				
		******************				
		< CAPACITOR >				
C101	1-163-038-91	CERAMIC CHIP	0.1uF		25V	
C102	1-163-989-11	CERAMIC CHIP	0.033uF	10%	25V	
C103	1-126-163-11	ELECT	4.7uF	20%	50V	
C104	1-163-038-91	CERAMIC CHIP	0.1uF		25V	
C105	1-126-154-11	ELECT	47uF	20%	6.3V	
C106	1-126-154-11	ELECT	47uF	20%	6.3V	
C107	1-126-154-11	ELECT	47uF	20%	6.3V	
C108	1-163-038-91	CERAMIC CHIP	0.1uF		25V	
C109	1-163-038-91	CERAMIC CHIP	0.1uF		25V	
C110	1-163-989-11	CERAMIC CHIP	0.033uF	10%	25V	
C111	1-131-367-00	TANTALUM	22uF	10%	20V	
C112	1-164-232-11	CERAMIC CHIP	0.01uF		50V	
C113	1-164-232-11	CERAMIC CHIP	0.01uF		50V	
C114	1-164-161-11	CERAMIC CHIP	0.0022uF	10%	100V	
C115	1-164-161-11	CERAMIC CHIP	0.0022uF	10%	100V	
C117	1-163-038-91	CERAMIC CHIP	0.1uF		25V	
C118	1-163-038-91	CERAMIC CHIP	0.1uF		25V	
C119	1-164-161-11	CERAMIC CHIP	0.0022uF	10%	100V	
C120	1-163-989-11	CERAMIC CHIP	0.033uF	10%	25V	
C151	1-163-019-00	CERAMIC CHIP	0.0068uF	10%	50V	
C152	1-163-038-91	CERAMIC CHIP	0.1uF		25V	
C153	1-163-006-11	CERAMIC CHIP	560PF	10%	50V	
C154	1-164-161-11	CERAMIC CHIP	0.0022uF	10%	100V	
C155	1-163-023-00	CERAMIC CHIP	0.015uF	5%	50V	
C171	1-163-038-91	CERAMIC CHIP	0.1uF		25V	
C172	1-163-038-91	CERAMIC CHIP	0.1uF		25V	
C173	1-163-038-91	CERAMIC CHIP	0.1uF		25V	
C174	1-163-038-91	CERAMIC CHIP	0.1uF		25V	
		< CONNECTOR >				
CN101	1-568-796-11	SOCKET, CONNECTOR 22P				
CN102	1-568-795-11	SOCKET, CONNECTOR 12P				
		< IC >				
IC101	8-752-053-73	IC CXA1372AQ				
IC102	8-759-822-36	IC LA6532M				

Ref. No.	Part No.	Description				Remark
		< JUMPER RESISTOR >				
JR101	1-216-295-00	METAL CHIP	0	5%	1/10W	
JR102	1-216-295-00	METAL CHIP	0	5%	1/10W	
		< MOTOR >				
M101	X-4917-523-3	MOTOR, DISK ASSY (SPINDLE)				
M102	X-4917-504-1	MOTOR, ASSY (SLED)				
		< TRANSISTOR >				
Q101	8-729-901-01	TRANSISTOR DTC144EK				
		< RESISTOR >				
R101	1-216-097-00	METAL CHIP	100K	5%	1/10W	
R102	1-216-095-00	METAL CHIP	82K	5%	1/10W	
R103	1-216-091-00	METAL CHIP	56K	5%	1/10W	
R104	1-216-099-00	METAL CHIP	120K	5%	1/10W	
R105	1-216-069-00	METAL CHIP	6.8K	5%	1/10W	
R106	1-216-061-00	METAL CHIP	3.3K	5%	1/10W	
R107	1-216-114-00	METAL GLAZE	510K	5%	1/10W	
R108	1-216-105-91	METAL GLAZE	220K	5%	1/10W	
R109	1-216-061-00	METAL CHIP	3.3K	5%	1/10W	
R110	1-216-049-00	METAL CHIP	1K	5%	1/10W	
R111	1-216-049-00	METAL CHIP	1K	5%	1/10W	
R112	1-216-083-00	METAL CHIP	27K	5%	1/10W	
R113	1-216-071-00	METAL CHIP	8.2K	5%	1/10W	
R114	1-216-105-91	METAL GLAZE	220K	5%	1/10W	
R152	1-216-073-00	METAL CHIP	10K	5%	1/10W	
R153	1-216-085-00	METAL CHIP	33K	5%	1/10W	
R154	1-216-085-00	METAL CHIP	33K	5%	1/10W	
R155	1-216-093-00	METAL CHIP	68K	5%	1/10W	
R156	1-216-081-00	METAL CHIP	22K	5%	1/10W	
R157	1-216-079-00	METAL CHIP	18K	5%	1/10W	
R158	1-216-079-00	METAL CHIP	18K	5%	1/10W	
R159	1-216-079-00	METAL CHIP	18K	5%	1/10W	
R160	1-216-049-00	METAL CHIP	1K	5%	1/10W	
R171	1-216-001-00	METAL CHIP	10	5%	1/10W	
R172	1-216-001-00	METAL CHIP	10	5%	1/10W	
R173	1-216-001-00	METAL CHIP	10	5%	1/10W	
R174	1-216-001-00	METAL CHIP	10	5%	1/10W	

BD | CD MAIN

Ref. No.	Part No.	Description			Remark
		< VARIABLE RESISTOR >			
RV101	1-238-600-11	RES, ADJ, CARBON 10K			
RV102	1-238-600-11	RES, ADJ, CARBON 10K			
		< SWITCH >			
S101	1-572-085-11	SWITCH, LEAF (LIMIT)			

****

Ref. No.	Part No.	Description			Remark
*	A-4360-947-A	CD MAIN BOARD, COMPLETE			
		**********************			
		< CAPACITOR >			
C400	1-124-360-00	ELECT	1000uF	20%	16V
C405	1-124-443-00	ELECT	100uF	20%	10V
C406	1-164-161-11	CERAMIC CHIP	0.0022uF	10%	100V
C407	1-165-319-11	CERAMIC CHIP	0.1uF		50V
C408	1-124-443-00	ELECT	100uF	20%	10V
C409	1-165-319-11	CERAMIC CHIP	0.1uF		50V
C410	1-165-319-11	CERAMIC CHIP	0.1uF		50V
C411	1-126-176-11	ELECT	220uF	20%	10V
C412	1-164-346-11	CERAMIC CHIP	1uF		16V
C413	1-164-346-11	CERAMIC CHIP	1uF		16V
C414	1-165-319-11	CERAMIC CHIP	0.1uF		50V
C415	1-124-443-00	ELECT	100uF	20%	10V
C419	1-164-346-11	CERAMIC CHIP	1uF		16V
C420	1-163-035-00	CERAMIC CHIP	0.047uF		50V
C421	1-163-145-00	CERAMIC CHIP	0.0015uF	5%	50V
C422	1-164-346-11	CERAMIC CHIP	1uF		16V
C423	1-164-005-11	CERAMIC CHIP	0.47uF		25V
C424	1-164-232-11	CERAMIC CHIP	0.01uF		50V
C425	1-164-346-11	CERAMIC CHIP	1uF		16V
C426	1-164-346-11	CERAMIC CHIP	1uF		16V
C427	1-164-346-11	CERAMIC CHIP	1uF		16V
C428	1-165-319-11	CERAMIC CHIP	0.1uF		50V
C429	1-163-229-11	CERAMIC CHIP	12PF	5%	50V
C430	1-163-227-11	CERAMIC CHIP	10PF	0.5PF	50V
C431	1-164-346-11	CERAMIC CHIP	1uF		16V
C432	1-164-346-11	CERAMIC CHIP	1uF		16V
C433	1-164-346-11	CERAMIC CHIP	1uF		16V
C434	1-164-346-11	CERAMIC CHIP	1uF		16V
C435	1-165-319-11	CERAMIC CHIP	0.1uF		50V
C436	1-165-319-11	CERAMIC CHIP	0.1uF		50V
C437	1-165-319-11	CERAMIC CHIP	0.1uF		50V
C438	1-165-319-11	CERAMIC CHIP	0.1uF		50V
C442	1-163-137-00	CERAMIC CHIP	680PF	5%	50V
C443	1-163-137-00	CERAMIC CHIP	680PF	5%	50V
C450	1-124-604-00	ELECT	330uF	20%	10V
C452	1-124-604-00	ELECT	330uF	20%	10V
C454	1-124-903-11	ELECT	1uF	20%	50V

Ref. No.	Part No.	Description			Remark
C455	1-124-902-00	ELECT	0.47uF	20%	50V
C456	1-165-319-11	CERAMIC CHIP	0.1uF		50V
C457	1-124-917-11	ELECT	33uF	20%	63V
C458	1-165-319-11	CERAMIC CHIP	0.1uF		50V
C460	1-124-604-00	ELECT	330uF	20%	10V
C482	1-130-481-00	MYLAR	0.0068uF	5%	50V
C483	1-130-481-00	MYLAR	0.0068uF	5%	50V
C484	1-124-907-11	ELECT	10uF	20%	50V
C485	1-124-907-11	ELECT	10uF	20%	50V
		< CONNECTOR >			
CN402	1-695-383-31	PIN, CONNECTOR (PC BOARD) 22P			
CN403	1-691-644-11	SOCKET, CONNECTOR 7P			
CN404	1-695-376-21	PIN, CONNECTOR (PC BOARD) 15P			
CN406	1-506-481-11	PIN, CONNECTOR 2P			
* CN407	1-568-945-11	PIN, CONNECTOR 7P			
* CN408	1-573-275-11	PIN, CONNECTOR 5P			
* CN409	1-568-941-11	PIN, CONNECTOR 3P			
* CN410	1-568-941-11	PIN, CONNECTOR 3P			
* CN411	1-568-942-11	PIN, CONNECTOR 4P			
		< DIODE >			
D406	8-719-990-39	DIODE DCB010			
D407	8-719-210-33	DIODE EC10DS2			
D408	8-719-210-33	DIODE EC10DS2			
D410	8-719-990-39	DIODE DCB010			
		< IC >			
IC402	8-759-604-86	IC M5F7807L			
IC403	8-759-821-93	IC LA5601			
IC404	8-759-821-93	IC LA5601			
IC408	8-759-009-21	IC MC14093BF			
IC409	8-752-352-93	IC CXD2500BQ			
IC410	8-759-098-27	IC MSM6538-01GS-VKR1			
IC411	8-759-155-52	IC PCM-67U-B			
IC412	8-759-636-55	IC M5218AFP			
IC414	8-759-501-73	IC BA6418N			
IC415	8-759-501-73	IC BA6418N			
IC416	8-759-501-73	IC BA6418N			
IC450	8-759-163-37	IC uPD75516GF-461-3B9			
		< JUMPER RESISTOR >			
JR401	1-216-295-00	METAL CHIP	0	5%	1/10W
JR403	1-216-295-00	METAL CHIP	0	5%	1/10W
JR410	1-216-295-00	METAL CHIP	0	5%	1/10W
JR488	1-216-295-00	METAL CHIP	0	5%	1/10W
JR490	1-216-295-00	METAL CHIP	0	5%	1/10W
		< COIL >			
L401	1-408-777-00	INDUCTOR CHIP	10uH		

Ref. No.	Part No.	Description				Remark
L402	1-408-777-00	INDUCTOR CHIP	10uH			
L403	1-408-777-00	INDUCTOR CHIP	10uH			
L405	1-408-777-00	INDUCTOR CHIP	10uH			
		< TRANSISTOR >				
Q401	8-729-118-01	TRANSISTOR	2SB1116-K			
Q402	8-729-900-80	TRANSISTOR	DTC114ES			
		< RESISTOR >				
R401	1-216-001-00	METAL CHIP	10	5%	1/10W	
R402	1-216-073-00	METAL CHIP	10K	5%	1/10W	
R404	1-216-043-00	METAL CHIP	560	5%	1/10W	
R405	1-216-073-00	METAL CHIP	10K	5%	1/10W	
R406	1-216-073-00	METAL CHIP	10K	5%	1/10W	
R407	1-216-073-00	METAL CHIP	10K	5%	1/10W	
R408	1-216-073-00	METAL CHIP	10K	5%	1/10W	
R409	1-216-349-00	CARBON	1	5%	1/2W	
R417	1-216-073-00	METAL CHIP	10K	5%	1/10W	
R418	1-216-073-00	METAL CHIP	10K	5%	1/10W	
R419	1-216-073-00	METAL CHIP	10K	5%	1/10W	
R420	1-216-073-00	METAL CHIP	10K	5%	1/10W	
R421	1-216-049-00	METAL CHIP	1K	5%	1/10W	
R422	1-216-073-00	METAL CHIP	10K	5%	1/10W	
R423	1-216-073-00	METAL CHIP	10K	5%	1/10W	
R424	1-216-073-00	METAL CHIP	10K	5%	1/10W	
R425	1-216-073-00	METAL CHIP	10K	5%	1/10W	
R426	1-216-073-00	METAL CHIP	10K	5%	1/10W	
R427	1-216-073-00	METAL CHIP	10K	5%	1/10W	
R428	1-216-073-00	METAL CHIP	10K	5%	1/10W	
R429	1-216-073-00	METAL CHIP	10K	5%	1/10W	
R430	1-216-073-00	METAL CHIP	10K	5%	1/10W	
R431	1-216-073-00	METAL CHIP	10K	5%	1/10W	
R432	1-216-073-00	METAL CHIP	10K	5%	1/10W	
R433	1-216-073-00	METAL CHIP	10K	5%	1/10W	
R434	1-216-061-00	METAL CHIP	3.3K	5%	1/10W	
R435	1-216-061-00	METAL CHIP	3.3K	5%	1/10W	
R436	1-216-073-00	METAL CHIP	10K	5%	1/10W	
R437	1-216-073-00	METAL CHIP	10K	5%	1/10W	
R439	1-216-061-00	METAL CHIP	3.3K	5%	1/10W	
R440	1-216-061-00	METAL CHIP	3.3K	5%	1/10W	
R441	1-216-073-00	METAL CHIP	10K	5%	1/10W	
R442	1-216-073-00	METAL CHIP	10K	5%	1/10W	
R443	1-216-097-00	METAL CHIP	100K	5%	1/10W	
R444	1-216-041-00	METAL CHIP	470	5%	1/10W	
R445	1-216-041-00	METAL CHIP	470	5%	1/10W	
R446	1-216-041-00	METAL CHIP	470	5%	1/10W	
R447	1-216-041-00	METAL CHIP	470	5%	1/10W	
R449	1-216-041-00	METAL CHIP	470	5%	1/10W	
R450	1-216-041-00	METAL CHIP	470	5%	1/10W	
R451	1-216-041-00	METAL CHIP	470	5%	1/10W	

Ref. No.	Part No.	Description				Remark
R452	1-216-041-00	METAL CHIP	470	5%	1/10W	
R453	1-216-060-00	METAL GLAZE	3K	5%	1/10W	
R454	1-216-060-00	METAL GLAZE	3K	5%	1/10W	
R460	1-216-068-00	METAL CHIP	6.2K	5%	1/10W	
R461	1-216-068-00	METAL CHIP	6.2K	5%	1/10W	
R462	1-216-009-00	METAL CHIP	22	5%	1/10W	
R463	1-216-051-00	METAL CHIP	1.2K	5%	1/10W	
R464	1-216-051-00	METAL CHIP	1.2K	5%	1/10W	
R468	1-216-049-00	METAL CHIP	1K	5%	1/10W	
R469	1-216-025-00	METAL CHIP	100	5%	1/10W	
R470	1-216-025-00	METAL CHIP	100	5%	1/10W	
R471	1-216-025-00	METAL CHIP	100	5%	1/10W	
R472	1-216-025-00	METAL CHIP	100	5%	1/10W	
R473	1-216-061-00	METAL CHIP	3.3K	5%	1/10W	
R474	1-216-061-00	METAL CHIP	3.3K	5%	1/10W	
R475	1-216-061-00	METAL CHIP	3.3K	5%	1/10W	
R476	1-216-061-00	METAL CHIP	3.3K	5%	1/10W	
R478	1-216-025-00	METAL CHIP	100	5%	1/10W	
R483	1-216-035-00	METAL CHIP	270	5%	1/10W	
R484	1-216-035-00	METAL CHIP	270	5%	1/10W	
R485	1-216-105-91	METAL GLAZE	220K	5%	1/10W	
R486	1-216-105-91	METAL GLAZE	220K	5%	1/10W	
R492	1-216-089-91	METAL GLAZE	47K	5%	1/10W	
R493	1-216-089-91	METAL GLAZE	47K	5%	1/10W	
R494	1-216-089-91	METAL GLAZE	47K	5%	1/10W	
R495	1-216-089-91	METAL GLAZE	47K	5%	1/10W	
R496	1-216-089-91	METAL GLAZE	47K	5%	1/10W	
R497	1-216-089-91	METAL GLAZE	47K	5%	1/10W	
R498	1-216-089-91	METAL GLAZE	47K	5%	1/10W	
R499	1-216-089-91	METAL GLAZE	47K	5%	1/10W	
		< SWITCH >				
S102	1-466-819-11	ENCODER, ROTARY				
		< VIBRATOR >				
X401	1-577-359-21	VIBRATOR, CERAMIC (4.19MHz)				
X402	1-567-908-11	VIBRATOR, CRYSTAL (16MHz)				

****

* 1-645-607-11 CDM MOTOR BOARD (A-H)
****

Ref. No.	Part No.	Description		Remark
		< CAPACITOR >		
C101	1-164-159-11	CERAMIC	0.1uF	50V
C102	1-164-159-11	CERAMIC	0.1uF	50V
C103	1-164-159-11	CERAMIC	0.1uF	50V
		< CONNECTOR >		
* CN106	1-568-954-11	PIN, CONNECTOR 5P		

CDM MOTOR | DISPLAY

Ref. No.	Part No.	Description				Remark
		< IC >				
IC401	8-759-071-52	IC ON1023-S				
IC601	8-759-071-52	IC ON1023-S				
		< MOTOR >				
M103	A-4660-232-A	MOTOR (CDM) ASSY (LOADING)				
M104	A-4660-232-A	MOTOR (CDM) ASSY (UP/DOWN)				
M105	A-4660-232-A	MOTOR (CDM) ASSY (CLAMP)				
		< RESISTOR >				
R401	1-249-407-11	CARBON	150	5%	1/4W	F
R402	1-249-429-11	CARBON	10K	5%	1/4W	
R601	1-249-407-11	CARBON	150	5%	1/4W	F
R602	1-249-429-11	CARBON	10K	5%	1/4W	
		< SWITCH >				
S101	1-571-300-21	SWITCH, ROTARY (BU UP/DOWN)				
S103	1-692-080-11	SWITCH, PUSH (1 KEY)(TRAY OUT)				
S104	1-692-080-11	SWITCH, PUSH (1 KEY)(TRAN IN)				

****

Ref. No.	Part No.	Description
*	A-4360-946-A	DISPLAY BOARD, COMPLETE (C50:CND/C50U) ***********************
*	A-4360-962-A	DISPLAY BOARD, COMPLETE (C50:G) ***********************
*	A-4360-971-A	DISPLAY BOARD, COMPLETE (C50:AEP, UK) ***********************
*	A-4360-978-A	DISPLAY BOARD, COMPLETE *********************** (C50:E, EA, AUS, SP, PX)
*	A-4365-147-A	DISPLAY BOARD, COMPLETE (C50:IT) ***********************
*	A-4365-149-A	DISPLAY BOARD, COMPLETE (C50:EE) ***********************
*	4-955-901-01	CUSHION (FL)
*	4-959-227-01	HOLDER, LED
	4-959-581-01	COVER (SENSOR)

Ref. No.	Part No.	Description			Remark
		< CAPACITOR >			
C501	1-126-160-11	ELECT	1uF	20%	50V
C502	1-126-160-11	ELECT	1uF	20%	50V
C503	1-164-097-11	CERAMIC	0.022uF		50V
C505	1-126-301-11	ELECT	1uF	20%	50V
C506	1-163-033-00	CERAMIC CHIP	0.022uF		50V
C507	1-163-033-00	CERAMIC CHIP	0.022uF		50V
C508	1-136-165-00	FILM	0.1uF	5%	50V
C509	1-163-033-00	CERAMIC CHIP	0.022uF		50V
C510	1-136-173-00	FILM	0.47uF	5%	50V
C511	1-163-033-00	CERAMIC CHIP	0.022uF		50V
C512	1-164-097-11	CERAMIC	0.022uF		50V
C513	1-124-261-00	ELECT	10uF	20%	50V
C514	1-163-235-11	CERAMIC CHIP	22PF	5%	50V
C515	1-163-099-00	CERAMIC CHIP	18PF	5%	50V
C516	1-124-261-00	ELECT	10uF	20%	50V
C517	1-125-486-11	DOUBLE LAYERS	0.22F		5.5V
C518	1-124-261-00	ELECT	10uF	20%	50V
C598	1-163-141-00	CERAMIC CHIP	0.001uF	5%	50V
C601	1-164-346-11	CERAMIC CHIP	1uF		16V
C602	1-164-346-11	CERAMIC CHIP	1uF		16V
C603	1-164-161-11	CERAMIC CHIP	0.0022uF	10%	100V
C604	1-165-319-11	CERAMIC CHIP	0.1uF		50V
C881	1-124-257-00	ELECT	2.2uF	20%	50V
C882	1-124-257-00	ELECT	2.2uF	20%	50V
C883	1-124-257-00	ELECT	2.2uF	20%	50V
C884	1-165-319-11	CERAMIC CHIP	0.1uF		50V
C885	1-124-465-00	ELECT	0.47uF	20%	50V
C886	1-124-257-00	ELECT	2.2uF	20%	50V
C887	1-163-033-00	CERAMIC CHIP	0.022uF		50V
C888	1-165-319-11	CERAMIC CHIP	0.1uF		50V
C889	1-124-257-00	ELECT	2.2uF	20%	50V
C890	1-163-017-00	CERAMIC CHIP	0.0047uF	5%	50V
C891	1-163-033-00	CERAMIC CHIP	0.022uF		50V
C892	1-124-257-00	ELECT	2.2uF	20%	50V
C893	1-163-011-11	CERAMIC CHIP	0.0015uF	10%	50V
C894	1-165-319-11	CERAMIC CHIP	0.1uF		50V

Ref. No.	Part No.	Description	
		< CONNECTOR >	
CN601	1-691-648-11	SOCKET, CONNECTOR 15P	
CN602	1-695-372-31	PIN, CONNECTOR (PC BOARD) 11P	
CN603	1-695-380-31	PIN, CONNECTOR (PC BOARD) 19P	
		< DIODE >	
D425	8-719-301-37	LED	SEL2210S-CD (TUNING)
D426	8-719-301-37	LED	SEL2210S-CD (PRESET)
D502	8-719-990-39	DIODE	DCB010
D503	8-719-210-33	DIODE	EC10DS2
D504	8-719-990-39	DIODE	DCB010
D505	8-719-990-39	DIODE	DCB010
D506	8-719-990-39	DIODE	DCB010
D507	8-719-400-62	DIODE	MA3068-L
D508	8-719-990-39	DIODE	DCB010
D601	8-719-990-39	DIODE	DCB010
D603	8-719-301-43	LED	SEL2410E-C (DISC 1)
D604	8-719-301-43	LED	SEL2410E-C (DISC 2)
D605	8-719-301-43	LED	SEL2410E-C (DISC 3)
D606	8-719-301-43	LED	SEL2410E-C (DISC 4)
D607	8-719-301-43	LED	SEL2410E-C (DISC 5)

Ref. No.	Part No.	Description	Remark
D608	8-719-301-38	LED SEL2210S-C (DISC 1)	
D609	8-719-301-38	LED SEL2210S-C (DISC 2)	
D610	8-719-301-38	LED SEL2210S-C (DISC 3)	
D611	8-719-301-38	LED SEL2210S-C (DISC 4)	
D612	8-719-301-38	LED SEL2210S-C (DISC 5)	
D627	8-719-029-95	LED TLN117	
D881	8-719-990-39	DIODE DCB010	
D882	8-719-990-39	DIODE DCB010	
D883	8-719-990-39	DIODE DCB010	
D884	8-719-990-39	DIODE DCB010	
D885	8-719-990-39	DIODE DCB010	
		< FLUORESCENT INDICATOR >	
FL501	1-517-182-11	INDICATOR TUBE, FLUORESCENT	
		< IC >	
IC501	8-759-175-89	IC uPD78042-GF-033-3B9	
IC502	8-759-634-43	IC M51953BFP	
IC601	8-759-175-91	IC uPD75517-GF-209-3B9	
		< JUMPER RESISTOR >	
JR601	1-216-296-00	METAL CHIP 0 5% 1/8W	
JR800	1-216-296-00	METAL CHIP 0 5% 1/8W	
		< COIL >	
L501	1-408-789-21	INDUCTOR CHIP 100uH	
L601	1-408-777-00	INDUCTOR CHIP 10uH	
		< TRANSISTOR >	
Q501	8-729-602-21	TRANSISTOR 2SC4154-F	
Q502	8-729-602-21	TRANSISTOR 2SC4154-F	
Q601	8-729-602-21	TRANSISTOR 2SC4154-F	
Q602	8-729-602-36	TRANSISTOR 2SA1602-F	
Q603	8-729-602-36	TRANSISTOR 2SA1602-F	
Q604	8-729-018-23	TRANSISTOR TPS626	
Q605	8-729-602-21	TRANSISTOR 2SC4154-F	
Q606	8-729-602-21	TRANSISTOR 2SC4154-F	
Q607	8-729-602-21	TRANSISTOR 2SC4154-F	
Q608	8-729-602-21	TRANSISTOR 2SC4154-F	
Q609	8-729-602-21	TRANSISTOR 2SC4154-F	
		< RESISTOR >	
R503	1-216-025-00	METAL CHIP 100 5% 1/10W	
R505	1-216-073-00	METAL CHIP 10K 5% 1/10W	
R506	1-216-081-00	METAL CHIP 22K 5% 1/10W	
R507	1-216-081-00	METAL CHIP 22K 5% 1/10W	
R527	1-216-089-91	METAL GLAZE 47K 5% 1/10W	
R528	1-216-089-91	METAL GLAZE 47K 5% 1/10W	
R529	1-216-089-91	METAL GLAZE 47K 5% 1/10W	
R530	1-216-089-91	METAL GLAZE 47K 5% 1/10W	
R531	1-216-089-91	METAL GLAZE 47K 5% 1/10W	
R532	1-216-089-91	METAL GLAZE 47K 5% 1/10W	
R533	1-216-089-91	METAL GLAZE 47K 5% 1/10W	
R534	1-216-089-91	METAL GLAZE 47K 5% 1/10W	
R535	1-216-089-91	METAL GLAZE 47K 5% 1/10W	
R536	1-216-089-91	METAL GLAZE 47K 5% 1/10W	
R537	1-216-089-91	METAL GLAZE 47K 5% 1/10W	
R538	1-216-089-91	METAL GLAZE 47K 5% 1/10W	
R539	1-216-089-91	METAL GLAZE 47K 5% 1/10W	
R540	1-216-089-91	METAL GLAZE 47K 5% 1/10W	
R541	1-216-089-91	METAL GLAZE 47K 5% 1/10W	
R542	1-216-089-91	METAL GLAZE 47K 5% 1/10W	
R543	1-216-089-91	METAL GLAZE 47K 5% 1/10W	
R544	1-216-089-91	METAL GLAZE 47K 5% 1/10W	
R548	1-216-073-00	METAL CHIP 10K 5% 1/10W	
R549	1-216-073-00	METAL CHIP 10K 5% 1/10W	
R550	1-216-089-91	METAL GLAZE 47K 5% 1/10W	
R551	1-216-073-00	METAL CHIP 10K 5% 1/10W	
R552	1-216-073-00	METAL CHIP 10K 5% 1/10W	
R553	1-216-073-00	METAL CHIP 10K 5% 1/10W	
R554	1-216-073-00	METAL CHIP 10K 5% 1/10W	
R560	1-216-121-00	METAL CHIP 1M 5% 1/10W	
R562	1-216-061-00	METAL CHIP 3.3K 5% 1/10W	
R563	1-216-041-00	METAL CHIP 470 5% 1/10W	(C50:E, EA, AUS, SP, PX)
R563	1-216-050-00	METAL CHIP 1.1K 5% 1/10W	(C50:AEP, UK)
R563	1-216-057-91	METAL GLAZE 2.2K 5% 1/10W	(C50:CND/C50U)
R563	1-216-062-00	METAL CHIP 3.6K 5% 1/10W	(C50:IT)
R563	1-216-067-91	METAL CHIP 5.6K 5% 1/10W	(C50:EE)
R563	1-216-072-00	METAL CHIP 9.1K 5% 1/10W	(C50:G)
R564	1-216-049-00	METAL CHIP 1K 5% 1/10W	
R565	1-216-057-91	METAL GLAZE 2.2K 5% 1/10W	
R566	1-216-073-00	METAL CHIP 10K 5% 1/10W	
R567	1-216-115-00	METAL CHIP 560K 5% 1/10W	
R578	1-216-037-00	METAL CHIP 330 5% 1/10W	
R579	1-216-053-00	METAL CHIP 1.5K 5% 1/10W	
R580	1-216-025-00	METAL CHIP 100 5% 1/10W	
R581	1-216-027-00	METAL CHIP 120 5% 1/10W	
R582	1-216-027-00	METAL CHIP 120 5% 1/10W	
R583	1-216-029-00	METAL CHIP 150 5% 1/10W	
R584	1-216-031-00	METAL CHIP 180 5% 1/10W	
R585	1-216-033-00	METAL CHIP 220 5% 1/10W	
R586	1-216-035-00	METAL CHIP 270 5% 1/10W	
R587	1-216-037-00	METAL CHIP 330 5% 1/10W	
R598	1-216-049-00	METAL CHIP 1K 5% 1/10W	

DISPLAY

Ref. No.	Part No.	Description				Remark
R599	1-216-049-00	METAL CHIP	1K	5%	1/10W	
R600	1-216-065-00	METAL CHIP	4.7K	5%	1/10W	
R601	1-216-061-00	METAL CHIP	3.3K	5%	1/10W	
R603	1-216-061-00	METAL CHIP	3.3K	5%	1/10W	
R604	1-216-061-00	METAL CHIP	3.3K	5%	1/10W	
R606	1-216-073-00	METAL CHIP	10K	5%	1/10W	
R607	1-216-073-00	METAL CHIP	10K	5%	1/10W	
R608	1-216-073-00	METAL CHIP	10K	5%	1/10W	
R609	1-216-073-00	METAL CHIP	10K	5%	1/10W	
R610	1-216-073-00	METAL CHIP	10K	5%	1/10W	
R611	1-216-073-00	METAL CHIP	10K	5%	1/10W	
R612	1-216-089-91	METAL GLAZE	47K	5%	1/10W	
R614	1-216-073-00	METAL CHIP	10K	5%	1/10W	
R615	1-216-051-00	METAL CHIP	1.2K	5%	1/10W	
R616	1-216-049-00	METAL CHIP	1K	5%	1/10W	
R617	1-216-061-00	METAL CHIP	3.3K	5%	1/10W	
R618	1-216-061-00	METAL CHIP	3.3K	5%	1/10W	
R619	1-216-061-00	METAL CHIP	3.3K	5%	1/10W	
R620	1-216-027-00	METAL CHIP	120	5%	1/10W	
R621	1-216-027-00	METAL CHIP	120	5%	1/10W	
R622	1-216-027-00	METAL CHIP	120	5%	1/10W	
R623	1-216-027-00	METAL CHIP	120	5%	1/10W	
R624	1-216-027-00	METAL CHIP	120	5%	1/10W	
R625	1-216-024-00	METAL GLAZE	91	5%	1/10W	
R626	1-216-024-00	METAL GLAZE	91	5%	1/10W	
R627	1-216-024-00	METAL GLAZE	91	5%	1/10W	
R628	1-216-024-00	METAL GLAZE	91	5%	1/10W	
R629	1-216-024-00	METAL GLAZE	91	5%	1/10W	
R630	1-216-073-00	METAL CHIP	10K	5%	1/10W	
R631	1-216-073-00	METAL CHIP	10K	5%	1/10W	
R632	1-216-073-00	METAL CHIP	10K	5%	1/10W	
R633	1-216-073-00	METAL CHIP	10K	5%	1/10W	
R634	1-216-073-00	METAL CHIP	10K	5%	1/10W	
R635	1-216-073-00	METAL CHIP	10K	5%	1/10W	
R636	1-216-073-00	METAL CHIP	10K	5%	1/10W	
R637	1-216-073-00	METAL CHIP	10K	5%	1/10W	
R638	1-216-057-91	METAL GLAZE	2.2K	5%	1/10W	
R651	1-216-041-00	METAL CHIP	470	5%	1/10W	
R652	1-216-045-00	METAL CHIP	680	5%	1/10W	
R653	1-216-049-00	METAL CHIP	1K	5%	1/10W	
R654	1-216-053-00	METAL CHIP	1.5K	5%	1/10W	
R655	1-216-057-91	METAL GLAZE	2.2K	5%	1/10W	
R656	1-216-065-00	METAL CHIP	4.7K	5%	1/10W	
R657	1-216-075-00	METAL CHIP	12K	5%	1/10W	
R658	1-216-041-00	METAL CHIP	470	5%	1/10W	
R659	1-216-045-00	METAL CHIP	680	5%	1/10W	
R660	1-216-049-00	METAL CHIP	1K	5%	1/10W	
R661	1-216-053-00	METAL CHIP	1.5K	5%	1/10W	
R662	1-216-057-91	METAL GLAZE	2.2K	5%	1/10W	
R663	1-216-065-00	METAL CHIP	4.7K	5%	1/10W	

Ref. No.	Part No.	Description				Remark
R664	1-216-041-00	METAL CHIP	470	5%	1/10W	
R665	1-216-045-00	METAL CHIP	680	5%	1/10W	
R666	1-216-049-00	METAL CHIP	1K	5%	1/10W	
R667	1-216-053-00	METAL CHIP	1.5K	5%	1/10W	
R668	1-216-057-91	METAL GLAZE	2.2K	5%	1/10W	
R669	1-216-065-00	METAL CHIP	4.7K	5%	1/10W	
R670	1-216-075-00	METAL CHIP	12K	5%	1/10W	
R684	1-216-073-00	METAL CHIP	10K	5%	1/10W	
R690	1-216-073-00	METAL CHIP	10K	5%	1/10W	
R691	1-216-073-00	METAL CHIP	10K	5%	1/10W	
R692	1-216-073-00	METAL CHIP	10K	5%	1/10W	
R693	1-216-073-00	METAL CHIP	10K	5%	1/10W	
R699	1-216-073-00	METAL CHIP	10K	5%	1/10W	
R881	1-216-097-00	METAL CHIP	100K	5%	1/10W	
R882	1-216-044-00	METAL CHIP	620	5%	1/10W	
R883	1-216-097-00	METAL CHIP	100K	5%	1/10W	
R884	1-216-063-00	METAL CHIP	3.9K	5%	1/10W	
R885	1-216-047-00	METAL CHIP	820	5%	1/10W	
R886	1-216-097-00	METAL CHIP	100K	5%	1/10W	
R887	1-216-073-00	METAL CHIP	10K	5%	1/10W	
R888	1-216-049-00	METAL CHIP	1K	5%	1/10W	
R889	1-216-097-00	METAL CHIP	100K	5%	1/10W	
R890	1-216-073-00	METAL CHIP	10K	5%	1/10W	
R891	1-216-049-00	METAL CHIP	1K	5%	1/10W	
R892	1-216-097-00	METAL CHIP	100K	5%	1/10W	
R893	1-216-072-00	METAL CHIP	9.1K	5%	1/10W	
R894	1-216-095-00	METAL CHIP	82K	5%	1/10W	

< SWITCH >

Ref. No.	Part No.	Description	Remark
S508	1-554-303-21	SWITCH, TACTILE (CLOCK SET/TIMER REC)	
S509	1-554-303-21	SWITCH, TACTILE (KARAOKE)	(C50:E, EA, AUS, SP, PX)
S510	1-554-303-21	SWITCH, TACTILE (CLOCK DISPLAY)	
S511	1-554-303-21	SWITCH, TACTILE (CLOCK SET/TIMER)	
S512	1-554-303-21	SWITCH, TACTILE (MEMORY/NEXT)	
S513	1-554-303-21	SWITCH, TACTILE (ST/MONO)	
S514	1-554-303-21	SWITCH, TACTILE (MODE)	
S515	1-554-303-21	SWITCH, TACTILE (BAND)	
S516	1-554-303-21	SWITCH, TACTILE (PRESET/TIMER -)	
S517	1-554-303-21	SWITCH, TACTILE (PRESET/TIMER +)	
S601	1-554-303-21	SWITCH, TACTILE (▷)	
S602	1-554-303-21	SWITCH, TACTILE (❚❚)	
S603	1-554-303-21	SWITCH, TACTILE (■)	
S604	1-554-303-21	SWITCH, TACTILE (OPEN/CLOSE ⏏ (1))	
S605	1-554-303-21	SWITCH, TACTILE (⏏ (2))	
S606	1-554-303-21	SWITCH, TACTILE (⏏ (3))	
S607	1-554-303-21	SWITCH, TACTILE (⏏ (4))	
S608	1-554-303-21	SWITCH, TACTILE (DISK CHECK ⏏ (5))	
S609	1-554-303-21	SWITCH, TACTILE (▶▶, ▷▷❘)	
S610	1-554-303-21	SWITCH, TACTILE (EDIT)	

Ref. No.	Part No.	Description				Remark
S611	1-554-303-21	SWITCH, TACTILE (DISC 1)				
S612	1-554-303-21	SWITCH, TACTILE (DISC 2)				
S613	1-554-303-21	SWITCH, TACTILE (DISC 3)				
S614	1-554-303-21	SWITCH, TACTILE (DISC 4)				
S615	1-554-303-21	SWITCH, TACTILE (DISC 5)				
S616	1-554-303-21	SWITCH, TACTILE (◀◀, ⏮)				
S617	1-554-303-21	SWITCH, TACTILE (MUSIC/SCAN)				
S618	1-554-303-21	SWITCH, TACTILE (REPEAT)				
S619	1-554-303-21	SWITCH, TACTILE (PROGRAM)				
S620	1-554-303-21	SWITCH, TACTILE (SUFFLE)				
S621	1-554-303-21	SWITCH, TACTILE (CONTINUE)				
S622	1-554-303-21	SWITCH, TACTILE (CLEAR)				
S623	1-554-303-21	SWITCH, TACTILE (CHECK)				
		< VIBRATOR >				
X501	1-567-098-00	OSCILLATOR, CRYSTAL (32.768kHz)				
X502	1-577-359-21	VIBRATOR, CERAMIC (32.768kHz)				
X601	1-577-359-21	VIBRATOR, CERAMIC (4.19MHz)				

****

Ref. No.	Part No.	Description				Remark
*	A-4360-951-A	FUNC BOARD, COMPLETE (C50U)				
		***************************				
*	A-4360-974-A	FUNC BOARD, COMPLETE (C50)				
		**************************				
		< CAPACITOR >				
C516	1-126-096-11	ELECT	10uF	20%	35V	
C521	1-161-494-00	CERAMIC	0.022uF		25V	
		< CONNECTOR >				
CN604	1-691-646-11	SOCKET, CONNECTOR 11P				
		< DIODE >				
D421	8-719-301-37	LED	SEL2210S-CD (MD/PHONO)			
D422	8-719-301-37	LED	SEL2210S-CD (TUNER)(C50)			
D422	8-719-301-37	LED	SEL2210S-CD (TAPE)(C50U)			
D423	8-719-301-37	LED	SEL2210S-CD (CD)			
D424	8-719-301-37	LED	SEL2210S-CD (TAPE)(C50)			
D424	8-719-301-37	LED	SEL2210S-CD (TUNER)(C50U)			
		< IC >				
IC401	8-759-056-83	IC	M66312P			
IC503	8-749-923-80	IC	GP1U90XB			
		< RESISTOR >				
R555	1-249-405-11	CARBON	100	5%	1/4W	F
R556	1-249-405-11	CARBON	100	5%	1/4W	F
R569	1-249-437-11	CARBON	47K	5%	1/4W	
R570	1-249-419-11	CARBON	1.5K	5%	1/4W	F
R571	1-249-405-11	CARBON	100	5%	1/4W	F
R572	1-249-406-11	CARBON	120	5%	1/4W	F
R573	1-249-406-11	CARBON	120	5%	1/4W	F
R574	1-249-407-11	CARBON	150	5%	1/4W	F
R575	1-249-408-11	CARBON	180	5%	1/4W	F
R576	1-249-409-11	CARBON	220	5%	1/4W	F
R577	1-249-409-11	CARBON	220	5%	1/4W	F
R588	1-249-429-11	CARBON	10K	5%	1/4W	
R589	1-249-417-11	CARBON	1K	5%	1/4W	F
R590	1-249-417-11	CARBON	1K	5%	1/4W	F
R591	1-249-429-11	CARBON	10K	5%	1/4W	
R592	1-249-413-11	CARBON	470	5%	1/4W	F
R593	1-249-413-11	CARBON	470	5%	1/4W	F
R594	1-249-413-11	CARBON	470	5%	1/4W	F
R595	1-249-413-11	CARBON	470	5%	1/4W	F
R596	1-249-413-11	CARBON	470	5%	1/4W	F
R597	1-249-413-11	CARBON	470	5%	1/4W	F
		< SWITCH >				
S500	1-554-303-21	SWITCH, TACTILE (POWER)				
S501	1-554-303-21	SWITCH, TACTILE (MD/PHONO)				
S502	1-554-303-21	SWITCH, TACTILE (TUNER)(C50)				
S502	1-554-303-21	SWITCH, TACTILE (TAPE)(C50U)				
S503	1-554-303-21	SWITCH, TACTILE (CD)				
S504	1-554-303-21	SWITCH, TACTILE (TAPE)(C50)				
S504	1-554-303-21	SWITCH, TACTILE (TUNER)(C50U)				
S505	1-554-303-21	SWITCH, TACTILE (SURROUND)				
S506	1-554-303-21	SWITCH, TACTILE (DBFB)				
S507	1-554-303-21	SWITCH, TACTILE (PRESET)				

****

Ref. No.	Part No.	Description				Remark
*	1-648-416-11	HP BOARD				
		********				
		< BREAKER >				
CB951	1-532-564-00	BREAKER, CIRCUIT				
CB971	1-532-564-00	BREAKER, CIRCUIT				
		< CONNECTOR >				
* CN951	1-564-519-11	PLUG, CONNECTOR 4P				
* CN952	1-564-519-11	PLUG, CONNECTOR 4P				
		< JACK >				
J951	1-750-032-11	JACK (DIA. 3.5)(HEADPHONES)				
		< RESISTOR >				
R963	1-249-415-11	CARBON	680	5%	1/4W	F
R964	1-249-415-11	CARBON	680	5%	1/4W	F
R983	1-249-415-11	CARBON	680	5%	1/4W	F

HP | KARAOKE.RELAY | LEAF SWITCH

Ref. No.	Part No.	Description	Remark
R984	1-249-415-11	CARBON 680 5% 1/4W	F

****

Ref. No.	Part No.	Description	Remark
*	1-648-763-11	KARAOKE.RELAY BOARD ******************	
		< CAPACITOR >	
C710	1-124-927-11	ELECT 4.7uF 20% 100V	(C50:E, EA, AUS, SP, PX)
C711	1-164-161-11	CERAMIC CHIP 0.0022uF 10% 100V	(C50:E, EA, AUS, SP, PX)
C712	1-163-022-00	CERAMIC CHIP 0.012uF 10% 50V	(C50:E, EA, AUS, SP, PX)
C713	1-163-109-00	CERAMIC CHIP 47PF 5% 50V	(C50:E, EA, AUS, SP, PX)
C714	1-163-109-00	CERAMIC CHIP 47PF 5% 50V	(C50:E, EA, AUS, SP, PX)
C715	1-124-927-11	ELECT 4.7uF 20% 100V	(C50:E, EA, AUS, SP, PX)
C760	1-124-927-11	ELECT 4.7uF 20% 100V	(C50:E, EA, AUS, SP, PX)
C761	1-164-161-11	CERAMIC CHIP 0.0022uF 10% 100V	(C50:E, EA, AUS, SP, PX)
C762	1-163-022-00	CERAMIC CHIP 0.012uF 10% 50V	(C50:E, EA, AUS, SP, PX)
C763	1-163-109-00	CERAMIC CHIP 47PF 5% 50V	(C50:E, EA, AUS, SP, PX)
C764	1-163-109-00	CERAMIC CHIP 47PF 5% 50V	(C50:E, EA, AUS, SP, PX)
C765	1-124-927-11	ELECT 4.7uF 20% 100V	(C50:E, EA, AUS, SP, PX)
		< CONNECTOR >	
CN610	1-695-376-21	PIN, CONNECTOR (PC BOARD) 15P	
CN611	1-695-338-11	PIN, CONNECTOR (PC BOARD) 15P	
		< IC >	
IC603	8-759-636-55	IC M5218AFP	(C50:E, EA, AUS, SP, PX)
IC604	8-759-008-67	IC MC14066BF	(C50:E, EA, AUS, SP, PX)
		< TRANSISTOR >	
Q712	8-729-900-63	TRANSISTOR DTA124ES	(C50:E, EA, AUS, SP, PX)
		< RESISTOR >	
R711	1-216-097-00	METAL CHIP 100K 5% 1/10W	(C50:E, EA, AUS, SP, PX)
R712	1-216-089-91	METAL GLAZE 47K 5% 1/10W	(C50:E, EA, AUS, SP, PX)
R713	1-216-089-91	METAL GLAZE 47K 5% 1/10W	(C50:E, EA, AUS, SP, PX)
R714	1-216-089-91	METAL GLAZE 47K 5% 1/10W	(C50:E, EA, AUS, SP, PX)
R715	1-216-689-11	METAL CHIP 39K 0.5% 1/10W	(C50:E, EA, AUS, SP, PX)
R716	1-216-097-00	METAL CHIP 100K 5% 1/10W	(C50:E, EA, AUS, SP, PX)
R722	1-216-089-91	METAL GLAZE 47K 5% 1/10W	(C50:E, EA, AUS, SP, PX)
R761	1-216-097-00	METAL CHIP 100K 5% 1/10W	(C50:E, EA, AUS, SP, PX)
R762	1-216-089-91	METAL GLAZE 47K 5% 1/10W	(C50:E, EA, AUS, SP, PX)
R763	1-216-089-91	METAL GLAZE 47K 5% 1/10W	(C50:E, EA, AUS, SP, PX)
R764	1-216-089-91	METAL GLAZE 47K 5% 1/10W	(C50:E, EA, AUS, SP, PX)
R765	1-216-689-11	METAL CHIP 39K 0.5% 1/10W	(C50:E, EA, AUS, SP, PX)
R766	1-216-097-00	METAL CHIP 100K 5% 1/10W	(C50:E, EA, AUS, SP, PX)

****

Ref. No.	Part No.	Description	Remark
*	1-644-686-21	LEAF SWITCH BOARD (A, B) (C50U) ****************************	
		< CAPACITOR >	
C1001	1-164-159-11	CERAMIC 0.1uF 50V	
		< CONNECTOR >	
* CN1001	1-568-856-11	SOCKET, CONNECTOR 13P	
CN1002	1-564-517-11	PLUG, CONNECTOR 2P	
		< MOTOR >	
M902	A-2004-188-A	MOTOR ASSY, DC (TRIGGER)	
		< TRANSISTOR >	
Q1001	8-719-710-02	TRANSISTOR PHOTO REFLECTOR NJL5165K-A	
Q1002	8-719-710-02	TRANSISTOR PHOTO REFLECTOR NJL5165K-A	
		< RESISTOR >	
R1001	1-249-411-11	CARBON 330 5% 1/4W	
R1002	1-249-411-11	CARBON 330 5% 1/4W	
		< SWITCH >	
S1001	1-572-202-11	SWITCH, LEAF (HALF)	
S1002	1-572-125-11	SWITCH, LEAF (70u/120u)	
S1003	1-572-125-11	SWITCH, LEAF (REC CLAW)	
S1004	1-572-125-11	SWITCH, LEAF (70u/120u)	
S1005	1-572-202-11	SWITCH, LEAF (HALF)	
S1006	1-572-125-11	SWITCH, LEAF (METAL)	

Ref. No.	Part No.	Description	Remark
S1007	1-692-193-11	SWITCH, PUSH (1 KEY)(STOP)	
S1008	1-692-193-11	SWITCH, PUSH (1 KEY)(STOP)	

****

Ref. No.	Part No.	Description	Remark
*	A-4360-827-A	MAIN BOARD, COMPLETE (C50:CND/C50U) ********************	
*	A-4360-960-A	MAIN BOARD, COMPLETE (C50:IT, G) ********************	
*	A-4360-964-A	MAIN BOARD, COMPLETE (C50:AEP, UK) ********************	
*	A-4360-976-A	MAIN BOARD, COMPLETE ********************	(C50:E, EA, AUS, SP, PX)
*	A-4365-148-A	MAIN BOARD, COMPLETE (C50:EE) ********************	
*	1-690-880-31	LEAD (WITH CONNECTOR)	(C50:AEP, UK, IT, G, EE, E, EA, AUS, SP, PX)
	7-682-548-04	SCREW +BATT 3X8 (S)	

< CAPACITOR >

Ref. No.	Part No.	Description	Value	Tol.	Voltage	Remark
C1	1-101-005-00	CERAMIC	22000PF		50V	
C2	1-124-907-11	ELECT	10uF	20%	50V	
C3	1-161-379-00	CERAMIC	0.01uF	20%	25V	
C4	1-162-294-31	CERAMIC	0.001uF	10%	50V	
C5	1-161-379-00	CERAMIC	0.01uF	20%	25V	
C6	1-164-159-11	CERAMIC	0.1uF		50V	(C50:AEP, UK, EE, E, EA, AUS, SP, PX)
C7	1-162-196-31	CERAMIC	5.6PF	10%	50V	(C50:AEP, UK, EE)
C7	1-162-198-31	CERAMIC	8.2PF	10%	50V	(C50:CND, IT, G, E, EA, AUS, SP, PX/C50U)
C8	1-101-005-00	CERAMIC	22000PF		50V	(C50:AEP, UK, EE)
C8	1-101-006-00	CERAMIC	0.047uF		50V	(C50:E, EA, AUS, SP, PX)
C9	1-162-195-31	CERAMIC	4.7PF	10%	50V	(C50:E, EA, AUS, SP, PX)
C10	1-102-120-00	CERAMIC	0.0018uF	10%	50V	(C50:AEP, UK, EE)
C11	1-161-374-11	CERAMIC	0.0015uF	20%	50V	(C50:AEP, UK, EE)
C12	1-130-492-11	MYLAR	0.056uF	5%	50V	(C50:E, EA, AUS, SP, PX)
C21	1-164-056-11	CERAMIC	27PF	5%	50V	
C22	1-164-056-11	CERAMIC	27PF	5%	50V	
C23	1-161-379-00	CERAMIC	0.01uF	20%	25V	
C24	1-161-379-00	CERAMIC	0.01uF	20%	25V	
C25	1-161-379-00	CERAMIC	0.01uF	20%	25V	
C26	1-124-907-11	ELECT	10uF	20%	50V	
C27	1-161-379-00	CERAMIC	0.01uF	20%	25V	
C29	1-161-379-00	CERAMIC	0.01uF	20%	25V	
C30	1-124-907-11	ELECT	10uF	20%	50V	
C31	1-124-925-11	ELECT	2.2uF	20%	100V	
C32	1-161-379-00	CERAMIC	0.01uF	20%	25V	
C33	1-124-463-00	ELECT	0.1uF	20%	50V	
C34	1-124-902-00	ELECT	0.47uF	20%	50V	(C50:AEP, UK, EE)
C35	1-101-005-00	CERAMIC	22000PF		50V	(C50:AEP, UK, EE)
C36	1-101-005-00	CERAMIC	22000PF		50V	(C50:AEP, UK, EE)
C51	1-124-907-11	ELECT	10uF	20%	50V	
C52	1-161-379-00	CERAMIC	0.01uF	20%	25V	
C53	1-162-282-31	CERAMIC	100PF	10%	50V	
C54	1-161-379-00	CERAMIC	0.01uF	20%	25V	
C55	1-161-379-00	CERAMIC	0.01uF	20%	25V	
C57	1-124-925-11	ELECT	2.2uF	20%	100V	
C58	1-124-903-11	ELECT	1uF	20%	50V	
C59	1-161-379-00	CERAMIC	0.01uF	20%	25V	
C60	1-124-903-11	ELECT	1uF	20%	50V	
C61	1-130-484-00	MYLAR	0.012uF	5%	50V	(C50:AEP, UK, IT, G, EE, E, EA, AUS, SP, PX)
C61	1-130-486-00	MYLAR	0.018uF	10%	50V	(C50:CND/C50U)
C62	1-130-484-00	MYLAR	0.012uF	5%	50V	(C50:AEP, UK, IT, G, EE, E, EA, AUS, SP, PX)
C62	1-130-486-00	MYLAR	0.018uF	10%	50V	(C50:CND/C50U)
C63	1-124-903-11	ELECT	1uF	20%	50V	
C64	1-124-903-11	ELECT	1uF	20%	50V	
C66	1-124-903-11	ELECT	1uF	20%	50V	
C67	1-124-903-11	ELECT	1uF	20%	50V	
C68	1-161-046-00	CERAMIC	0.0039uF	10%	25V	
C69	1-161-046-00	CERAMIC	0.0039uF	10%	25V	
C71	1-162-293-31	CERAMIC	820PF	10%	50V	(C50:IT, G)
C72	1-162-293-31	CERAMIC	820PF	10%	50V	(EXCEPT C50:IT, G)
C73	1-124-903-11	ELECT	1uF	20%	50V	
C75	1-161-377-00	CERAMIC	0.0047uF	30%	16V	
C76	1-124-907-11	ELECT	10uF	20%	50V	(C50:IT, G)
C76	1-124-916-11	ELECT	22uF	20%	63V	(EXCEPT C50:IT, G)
C77	1-161-379-00	CERAMIC	0.01uF	20%	25V	
C78	1-123-382-00	ELECT	3.3uF	20%	100V	
C79	1-161-379-00	CERAMIC	0.01uF	20%	25V	
C80	1-161-379-00	CERAMIC	0.01uF	20%	25V	
C81	1-161-379-00	CERAMIC	0.01uF	20%	25V	
C82	1-162-207-31	CERAMIC	22PF	5%	50V	(C50:AEP, UK, EE)

MAIN

Ref. No.	Part No.	Description	Remark
C92	1-124-907-11	ELECT 10uF 20% 50V	
C93	1-161-379-00	CERAMIC 0.01uF 20% 25V	
C94	1-164-159-11	CERAMIC 0.1uF 50V	
C96	1-124-907-11	ELECT 10uF 20% 50V	
C100	1-162-207-31	CERAMIC 22PF 5% 50V	
C101	1-124-916-11	ELECT 22uF 20% 63V	
C103	1-162-282-11	CERAMIC 100PF 10% 50V	
C104	1-162-282-11	CERAMIC 100PF 10% 50V	
C105	1-162-282-11	CERAMIC 100PF 10% 50V	
C701	1-162-286-31	CERAMIC 220PF 10% 50V	(C50:IT, G)
C706	1-162-282-31	CERAMIC 100PF 10% 50V	(C50:IT, G)
C721	1-162-215-31	CERAMIC 47PF 5% 50V	
C727	1-124-925-11	ELECT 2.2uF 20% 100V	
C731	1-124-927-11	ELECT 4.7uF 20% 100V	
C732	1-164-159-11	CERAMIC 0.1uF 50V	
C733	1-124-927-11	ELECT 4.7uF 20% 100V	
C734	1-162-215-31	CERAMIC 47PF 5% 50V	
C735	1-124-252-00	ELECT 0.33uF 20% 50V	
C736	1-124-902-00	ELECT 0.47uF 20% 50V	
C737	1-124-903-11	ELECT 1uF 20% 50V	
C740	1-124-477-11	ELECT 47uF 20% 25V	
C741	1-130-493-00	MYLAR 0.068uF 5% 50V	
C742	1-130-484-00	MYLAR 0.012uF 5% 50V	
C743	1-106-353-00	MYLAR 0.0027uF 5% 50V	
C744	1-130-487-00	MYLAR 0.022uF 5% 50V	
C745	1-124-927-11	ELECT 4.7uF 20% 100V	
C746	1-124-907-11	ELECT 10uF 20% 50V	
C747	1-124-927-11	ELECT 4.7uF 20% 100V	
C751	1-162-286-31	CERAMIC 220PF 10% 50V	(C50:IT, G)
C756	1-162-282-31	CERAMIC 100PF 10% 50V	(C50:IT, G)
C771	1-162-215-31	CERAMIC 47PF 5% 50V	
C781	1-124-927-11	ELECT 4.7uF 20% 100V	
C783	1-124-927-11	ELECT 4.7uF 20% 100V	
C784	1-162-215-31	CERAMIC 47PF 5% 50V	
C785	1-124-252-00	ELECT 0.33uF 20% 50V	
C786	1-124-902-00	ELECT 0.47uF 20% 50V	
C790	1-124-477-11	ELECT 47uF 20% 25V	
C791	1-130-493-00	MYLAR 0.068uF 5% 50V	
C792	1-130-484-00	MYLAR 0.012uF 5% 50V	
C793	1-106-353-00	MYLAR 0.0027uF 5% 50V	
C794	1-130-487-00	MYLAR 0.022uF 5% 50V	
C795	1-124-927-11	ELECT 4.7uF 20% 100V	
C801	1-162-286-31	CERAMIC 220PF 10% 50V	(C50:AEP, UK, IT, G, EE)
C802	1-162-286-31	CERAMIC 220PF 10% 50V	(C50:AEP, UK, IT, G, EE)
C803	1-124-927-11	ELECT 4.7uF 20% 100V	(C50:AEP, UK, IT, G, EE)
C804	1-102-126-00	CERAMIC 0.0056uF 10% 50V	(C50:AEP, UK, IT, G, EE)
C805	1-102-119-00	CERAMIC 1500PF 10% 50V	(C50:AEP, UK, IT, G, EE)
C806	1-124-903-11	ELECT 1uF 20% 50V	(C50:AEP, UK, IT, G, EE)
C807	1-162-282-31	CERAMIC 100PF 10% 50V	(C50:IT, G)
C821	1-162-286-31	CERAMIC 220PF 10% 50V	(C50:AEP, UK, IT, G, EE)
C822	1-162-286-31	CERAMIC 220PF 10% 50V	(C50:AEP, UK, IT, G, EE)
C823	1-124-927-11	ELECT 4.7uF 20% 100V	(C50:AEP, UK, IT, G, EE)
C824	1-102-126-00	CERAMIC 0.0056uF 10% 50V	(C50:AEP, UK, IT, G, EE)
C825	1-102-119-00	CERAMIC 1500PF 10% 50V	(C50:AEP, UK, IT, G, EE)
C826	1-124-903-11	ELECT 1uF 20% 50V	(C50:AEP, UK, IT, G, EE)
C827	1-162-282-31	CERAMIC 100PF 10% 50V	(C50:IT, G)
C841	1-124-477-11	ELECT 47uF 20% 25V	
C842	1-124-122-11	ELECT 100uF 20% 50V	
		< FILTER >	
CF1	1-567-389-11	FILTER, CERAMIC	
CF2	1-567-389-11	FILTER, CERAMIC	(C50:IT, G)
CF51	1-567-389-11	FILTER, CERAMIC	
		< CONNECTOR >	
CN701	1-750-180-11	PIN, CONNECTOR (PC BOARD) 5P	
CN702	1-695-089-11	PIN, CONNECTOR (PC BOARD) 11P	
CN703	1-695-087-11	PIN, CONNECTOR (PC BOARD) 7P	
CN704	1-691-644-11	SOCKET, CONNECTOR 7P	
CN705	1-564-511-11	PLUG, CONNECTOR 8P	(C50:E, EA, AUS, SP, PX)
* CN707	1-564-505-11	PLUG, CONNECTOR 2P	(C50:AEP, UK, IT, G, EE, E, EA, AUS, SP, PX)
CN750	1-564-505-11	PLUG, CONNECTOR 2P	(C50:AEP, UK, IT, G, EE)
CN751	1-564-506-11	PLUG, CONNECTOR 3P	(C50:AEP, UK, IT, G, EE)
CN801	1-695-342-31	PIN, CONNECTOR (PC BOARD) 19P	
* CN802	1-565-561-11	PIN, CONNECTOR 3P (AU BUS)	
		< VARIABLE CAPACITOR >	
CV1	1-141-227-00	CAP, TRIMMER 20PF	(C50:E, EA, AUS, SP, PX)
CV2	1-141-227-00	CAP, TRIMMER 20PF	(C50:E, EA, AUS, SP, PX)
		< DIODE >	
D1	8-719-976-30	DIODE KV1560N	(C50:E, EA, AUS, SP, PX)
D21	8-719-933-33	DIODE HZS6A1L	
D51	8-719-987-63	DIODE 1N4148M	

Ref. No.	Part No.	Description	Remark
D703	8-719-987-63	DIODE 1N4148M	
D704	8-719-987-63	DIODE 1N4148M	
D705	8-719-987-63	DIODE 1N4148M	
D841	8-719-987-63	DIODE 1N4148M	
D861	8-719-987-63	DIODE 1N4148M	
D862	8-719-987-63	DIODE 1N4148M	
		< FRONTEND >	
FE1	1-465-007-11	FRONT END (FM) (4 GANG)(C50:IT, G)	
FE1	1-465-396-11	FRONT END (3 GANG)(C50:EE)	
FE1	1-465-673-11	FRONT END (2 BAND)	(C50:CND, AEP, UK, E, EA, AUS, SP, PX/C50U)
FE2	1-239-261-12	ENCAPSULATED COMPONENT	(C50:AEP, UK, EE)
FE2	1-239-262-11	ENCAPSULATED COMPONENT	(C50:E, EA, AUS, SP, PX)
FE2	1-239-634-11	ENCAPSULATED COMPONENT, AM. RF	(C50:CND, IT, G/C50U)
FE3	1-236-463-11	ENCAPSULATED COMPONENT	(C50:AEP, UK, EE)
		< IC >	
IC21	8-759-820-91	IC LC7218	
IC51	8-759-090-40	IC LA1831	
IC701	8-759-000-48	IC MC14052BCP	
IC702	8-759-634-50	IC M5218AL	
IC703	8-759-000-49	IC uPD4066BC	
IC704	8-759-634-50	IC M5218AL	
IC705	8-759-072-32	IC TC9184P	
IC706	8-759-634-50	IC M5218AL	
IC801	8-759-634-51	IC M5218AP	(C50:AEP, UK, IT, G, EE)
IC802	8-759-000-49	IC uPD4066BC	(C50:AEP, UK, IT, G, EE)
IC841	8-759-635-31	IC M50253P	
		< IFT >	
IFT51	1-404-713-11	TRANSFORMER, IF	
		< JACK >	
J701	1-569-181-11	JACK, PIN 2P (MD/PHONO IN)	
J702	1-569-181-11	JACK, PIN 2P (MD PHONO OUT)	
		< COIL >	
L1	1-408-425-00	INDUCTOR 220uH	(C50:AEP, UK, EE)
L21	1-410-521-11	INDUCTOR 100uH	
L51	1-408-399-00	INDUCTOR 1.5uH	
		< FILTER >	
LPF51	1-239-597-11	FILTER, LOW PASS	
LPF52	1-239-597-11	FILTER, LOW PASS	
		< TRANSISTOR >	
Q1	8-729-620-19	TRANSISTOR 2SC2724-CD	
Q2	8-729-620-19	TRANSISTOR 2SC2724-CD	(C50:IT, G)
Q3	8-729-119-76	TRANSISTOR 2SA1175-HFE	
Q4	8-729-119-76	TRANSISTOR 2SA1175-HFE	(C50:AEP, UK, EE, E, EA, AUS, SP, PX)
Q5	8-729-119-76	TRANSISTOR 2SA1175-HFE	(C50:AEP, UK, EE, E, EA, AUS, SP, PX)
Q6	8-729-900-36	TRANSISTOR DTC124ES	(C50:AEP, UK, EE, E, EA, AUS, SP, PX)
Q7	8-729-900-36	TRANSISTOR DTC124ES	(C50:AEP, UK, EE, E, EA, AUS, SP, PX)
Q8	8-729-900-36	TRANSISTOR DTC124ES	(C50:AEP, UK, EE, E, EA, AUS, SP, PX)
Q9	8-729-620-05	TRANSISTOR 2SC2603-EF	(C50:AEP, UK, EE, E, EA, AUS, SP, PX)
Q21	8-729-202-67	TRANSISTOR 2SK246-GR3	
Q22	8-729-201-83	TRANSISTOR 2SC3112-A	
Q23	8-729-202-67	TRANSISTOR 2SK246-GR3	(C50:AEP, UK, EE)
Q24	8-729-201-83	TRANSISTOR 2SC3112-A	(C50:AEP, UK, EE)
Q51	8-729-620-05	TRANSISTOR 2SC2603-EF	
Q52	8-729-620-05	TRANSISTOR 2SC2603-EF	
Q53	8-729-900-36	TRANSISTOR DTC124ES	
Q701	8-729-900-63	TRANSISTOR DTA124ES	
Q702	8-729-900-36	TRANSISTOR DTC124ES	
Q731	8-729-224-61	TRANSISTOR 2SK246-Y	
Q732	8-729-224-61	TRANSISTOR 2SK246-Y	
Q733	8-729-620-05	TRANSISTOR 2SC2603-EF	
Q741	8-729-141-30	TRANSISTOR 2SC3623A-LK	
Q782	8-729-224-61	TRANSISTOR 2SK246-Y	
Q783	8-729-620-05	TRANSISTOR 2SC2603-EF	
Q791	8-729-141-30	TRANSISTOR 2SC3623A-LK	
Q841	8-729-900-63	TRANSISTOR DTA124ES	
Q842	8-729-900-63	TRANSISTOR DTA124ES	
Q843	8-729-900-63	TRANSISTOR DTA124ES	
		< RESISTOR >	
R1	1-249-411-11	CARBON 330 5% 1/4W	
R2	1-249-411-11	CARBON 330 5% 1/4W	
R3	1-247-891-00	CARBON 330K 5% 1/4W	
R4	1-249-411-11	CARBON 330 5% 1/4W	
R5	1-247-891-00	CARBON 330K 5% 1/4W	(C50:IT, G)
R6	1-249-411-11	CARBON 330 5% 1/4W	(C50:IT, G)
R7	1-249-402-11	CARBON 56 5% 1/4W F	(C50:IT, G)
R7	1-249-405-11	CARBON 100 5% 1/4W F	(EXCEPT C50:IT, G)
R8	1-249-429-11	CARBON 10K 5% 1/4W	(C50:AEP, UK, EE, E, EA, AUS, SP, PX)

MAIN

Ref. No.	Part No.	Description				Remark
R9	1-249-429-11	CARBON	10K	5%	1/4W	(C50:AEP, UK, EE, E, EA, AUS, SP, PX)
R10	1-249-437-11	CARBON	47K	5%	1/4W	
R11	1-249-437-11	CARBON	47K	5%	1/4W	
R12	1-249-425-11	CARBON	4.7K	5%	1/4W	F (C50:AEP, UK, EE, E, EA, AUS, SP, PX)
R13	1-247-903-00	CARBON	1M	5%	1/4W	(C50:E, EA, AUS, SP, PX)
R13	1-249-437-11	CARBON	47K	5%	1/4W	(C50:AEP, UK, EE)
R14	1-249-437-11	CARBON	47K	5%	1/4W	(C50:E, EA, AUS, SP, PX)
R14	1-249-429-11	CARBON	10K	5%	1/4W	(C50:AEP, UK, EE)
R15	1-249-429-11	CARBON	10K	5%	1/4W	(C50:AEP, UK, EE, E, EA, AUS, SP, PX)
R17	1-247-903-00	CARBON	1M	5%	1/4W	(C50:AEP, UK, EE)
R18	1-249-429-11	CARBON	10K	5%	1/4W	(C50:AEP, UK, EE, E, EA, AUS, SP, PX)
R19	1-249-429-11	CARBON	10K	5%	1/4W	(C50:AEP, UK, EE, E, EA, AUS, SP, PX)
R20	1-249-417-11	CARBON	1K	5%	1/4W	F
R21	1-249-417-11	CARBON	1K	5%	1/4W	F
R22	1-249-417-11	CARBON	1K	5%	1/4W	F
R23	1-249-417-11	CARBON	1K	5%	1/4W	F
R24	1-249-405-11	CARBON	100	5%	1/4W	F
R25	1-249-425-11	CARBON	4.7K	5%	1/4W	F
R26	1-249-417-11	CARBON	1K	5%	1/4W	F
R27	1-249-405-11	CARBON	100	5%	1/4W	F
R28	1-249-405-11	CARBON	100	5%	1/4W	F
R30	1-249-423-11	CARBON	3.3K	5%	1/4W	F
R31	1-249-414-11	CARBON	560	5%	1/4W	F
R32	1-249-417-11	CARBON	1K	5%	1/4W	F
R33	1-249-410-11	CARBON	270	5%	1/4W	F
R34	1-249-425-11	CARBON	4.7K	5%	1/4W	F
R35	1-249-421-11	CARBON	2.2K	5%	1/4W	F
R36	1-249-425-11	CARBON	4.7K	5%	1/4W	F
R37	1-249-425-11	CARBON	4.7K	5%	1/4W	F
R38	1-249-405-11	CARBON	100	5%	1/4W	F
R39	1-249-423-11	CARBON	3.3K	5%	1/4W	F (C50:AEP, UK, EE)
R40	1-249-414-11	CARBON	560	5%	1/4W	F (C50:AEP, UK, EE)
R41	1-249-417-11	CARBON	1K	5%	1/4W	F (C50:AEP, UK, EE)
R42	1-249-410-11	CARBON	270	5%	1/4W	F (C50:AEP, UK, EE)
R43	1-249-433-11	CARBON	22K	5%	1/4W	(C50:AEP, UK, EE)
R44	1-249-421-11	CARBON	2.2K	5%	1/4W	F (C50:AEP, UK, EE)
R45	1-249-425-11	CARBON	4.7K	5%	1/4W	F (C50:AEP, UK, EE)
R46	1-249-425-11	CARBON	4.7K	5%	1/4W	F (C50:AEP, UK, EE)
R47	1-249-417-11	CARBON	1K	5%	1/4W	F (C50:AEP, UK, EE, E, EA, AUS, SP, PX)
R51	1-249-423-11	CARBON	3.3K	5%	1/4W	F
R52	1-249-425-11	CARBON	4.7K	5%	1/4W	F
R53	1-249-412-11	CARBON	390	5%	1/4W	F
R54	1-247-870-11	CARBON	43K	5%	1/4W	
R55	1-249-429-11	CARBON	10K	5%	1/4W	
R56	1-247-842-11	CARBON	3K	5%	1/4W	
R57	1-249-429-11	CARBON	10K	5%	1/4W	
R58	1-249-437-11	CARBON	47K	5%	1/4W	
R59	1-249-417-11	CARBON	1K	5%	1/4W	F
R60	1-249-417-11	CARBON	1K	5%	1/4W	F
R61	1-247-891-00	CARBON	330K	5%	1/4W	
R62	1-247-891-00	CARBON	330K	5%	1/4W	
R63	1-249-421-11	CARBON	2.2K	5%	1/4W	F
R64	1-249-421-11	CARBON	2.2K	5%	1/4W	F
R66	1-249-395-11	CARBON	15	5%	1/4W	F (C50:E, EA, AUS, SP, PX)
R69	1-249-399-11	CARBON	33	5%	1/4W	F
R70	1-249-417-11	CARBON	1K	5%	1/4W	F (C50:AEP, UK, EE)
⚠R91	1-247-696-11	CARBON	47	5%	1/4W	
R92	1-249-405-11	CARBON	100	5%	1/4W	F
R100	1-249-429-11	CARBON	10K	5%	1/4W	
R101	1-249-429-11	CARBON	10K	5%	1/4W	
R102	1-249-417-11	CARBON	1K	5%	1/4W	F
R103	1-249-417-11	CARBON	1K	5%	1/4W	F
R104	1-249-417-11	CARBON	1K	5%	1/4W	F
R701	1-249-417-11	CARBON	1K	5%	1/4W	F
R702	1-247-868-11	CARBON	36K	5%	1/4W	
R703	1-249-429-11	CARBON	10K	5%	1/4W	
R704	1-249-429-11	CARBON	10K	5%	1/4W	
R705	1-249-437-11	CARBON	47K	5%	1/4W	
R706	1-249-417-11	CARBON	1K	5%	1/4W	F
R708	1-249-441-11	CARBON	100K	5%	1/4W	(C50:AEP, UK, IT, G, EE)
R709	1-249-441-11	CARBON	100K	5%	1/4W	
R710	1-249-429-11	CARBON	10K	5%	1/4W	
R711	1-249-417-11	CARBON	1K	5%	1/4W	F
R717	1-249-417-11	CARBON	1K	5%	1/4W	F
R723	1-249-429-11	CARBON	10K	5%	1/4W	
R724	1-247-858-11	CARBON	13K	5%	1/4W	
R725	1-249-429-11	CARBON	10K	5%	1/4W	(C50:AEP, UK, IT, G, EE, E, EA, AUS, SP, PX)
R726	1-247-842-11	CARBON	3K	5%	1/4W	
R727	1-249-441-11	CARBON	100K	5%	1/4W	
R729	1-249-433-11	CARBON	22K	5%	1/4W	
R730	1-249-429-11	CARBON	10K	5%	1/4W	

The components identified by mark ⚠ or dotted line with mark ⚠ are critical for safety. Replace only with part number specified.	Les composants identifiés par une marque ⚠ sont critiques pour la sécurité. Ne les remplacer que par une piéce portant le numéro spécifié.

Ref. No.	Part No.	Description				Remark
R731	1-249-420-11	CARBON	1.8K	5%	1/4W	F (C50:CND/C50U)
R731	1-249-421-11	CARBON	2.2K	5%	1/4W	F (C50:AEP, UK, IT, G, EE, E, EA, AUS, SP, PX)
R732	1-249-425-11	CARBON	4.7K	5%	1/4W	F
R733	1-249-440-11	CARBON	82K	5%	1/4W	
R734	1-247-895-00	CARBON	470K	5%	1/4W	
R735	1-249-414-11	CARBON	560	5%	1/4W	F
R736	1-249-441-11	CARBON	100K	5%	1/4W	
R737	1-249-439-11	CARBON	68K	5%	1/4W	
R738	1-249-411-11	CARBON	330	5%	1/4W	
R739	1-249-423-11	CARBON	3.3K	5%	1/4W	F
R741	1-249-425-11	CARBON	4.7K	5%	1/4W	F
R742	1-249-436-11	CARBON	39K	5%	1/4W	
R743	1-247-897-11	CARBON	560K	5%	1/4W	
R744	1-249-434-11	CARBON	27K	5%	1/4W	
R745	1-249-426-11	CARBON	5.6K	5%	1/4W	
R746	1-249-418-11	CARBON	1.2K	5%	1/4W	F
R747	1-249-441-11	CARBON	100K	5%	1/4W	
R748	1-249-423-11	CARBON	3.3K	5%	1/4W	F
R749	1-247-823-11	CARBON	470	5%	1/4W	F
R751	1-249-417-11	CARBON	1K	5%	1/4W	F
R752	1-247-868-11	CARBON	36K	5%	1/4W	
R756	1-249-417-11	CARBON	1K	5%	1/4W	F
R760	1-249-429-11	CARBON	10K	5%	1/4W	
R761	1-249-417-11	CARBON	1K	5%	1/4W	F
R767	1-249-417-11	CARBON	1K	5%	1/4W	F
R773	1-249-429-11	CARBON	10K	5%	1/4W	
R774	1-247-858-11	CARBON	13K	5%	1/4W	
R775	1-249-429-11	CARBON	10K	5%	1/4W	(C50:AEP, UK, IT, G, EE, E, EA, AUS, SP, PX)
R776	1-247-842-11	CARBON	3K	5%	1/4W	
R779	1-249-433-11	CARBON	22K	5%	1/4W	
R780	1-249-429-11	CARBON	10K	5%	1/4W	
R781	1-249-420-11	CARBON	1.8K	5%	1/4W	F (C50:CND/C50U)
R781	1-249-421-11	CARBON	2.2K	5%	1/4W	F (C50:AEP, UK, IT, G, EE, E, EA, AUS, SP, PX)
R782	1-247-903-00	CARBON	1M	5%	1/4W	
R783	1-249-440-11	CARBON	82K	5%	1/4W	
R784	1-247-895-00	CARBON	470K	5%	1/4W	
R785	1-249-414-11	CARBON	560	5%	1/4W	F
R786	1-249-441-11	CARBON	100K	5%	1/4W	
R787	1-249-439-11	CARBON	68K	5%	1/4W	
R788	1-249-411-11	CARBON	330	5%	1/4W	
R789	1-249-423-11	CARBON	3.3K	5%	1/4W	F
R791	1-249-425-11	CARBON	4.7K	5%	1/4W	F
R792	1-249-436-11	CARBON	39K	5%	1/4W	
R793	1-247-897-11	CARBON	560K	5%	1/4W	
R794	1-249-434-11	CARBON	27K	5%	1/4W	
R795	1-249-426-11	CARBON	5.6K	5%	1/4W	
R796	1-249-418-11	CARBON	1.2K	5%	1/4W	F
R797	1-249-441-11	CARBON	100K	5%	1/4W	
R798	1-249-423-11	CARBON	3.3K	5%	1/4W	F
R801	1-249-411-11	CARBON	330	5%	1/4W	(C50:AEP, UK, IT, G, EE)
R802	1-249-433-11	CARBON	22K	5%	1/4W	(C50:AEP, UK, IT, G, EE)
R803	1-249-417-11	CARBON	1K	5%	1/4W	F (C50:AEP, UK, IT, G, EE)
R804	1-247-897-11	CARBON	560K	5%	1/4W	(C50:AEP, UK, IT, G, EE)
R805	1-249-437-11	CARBON	47K	5%	1/4W	(C50:AEP, UK, IT, G, EE)
R806	1-249-430-11	CARBON	12K	5%	1/4W	(C50:AEP, UK, IT, G, EE)
R821	1-249-411-11	CARBON	330	5%	1/4W	(C50:AEP, UK, IT, G, EE)
R822	1-249-433-11	CARBON	22K	5%	1/4W	(C50:AEP, UK, IT, G, EE)
R823	1-249-417-11	CARBON	1K	5%	1/4W	F (C50:AEP, UK, IT, G, EE)
R824	1-247-897-11	CARBON	560K	5%	1/4W	(C50:AEP, UK, IT, G, EE)
R825	1-249-437-11	CARBON	47K	5%	1/4W	(C50:AEP, UK, IT, G, EE)
R826	1-249-430-11	CARBON	12K	5%	1/4W	(C50:AEP, UK, IT, G, EE)
R841	1-249-437-11	CARBON	47K	5%	1/4W	
R842	1-249-437-11	CARBON	47K	5%	1/4W	
R843	1-249-437-11	CARBON	47K	5%	1/4W	
R850	1-249-405-11	CARBON	100	5%	1/4W	F
R851	1-249-417-11	CARBON	1K	5%	1/4W	F
R852	1-249-437-11	CARBON	47K	5%	1/4W	
R853	1-249-441-11	CARBON	100K	5%	1/4W	
R857	1-249-417-11	CARBON	1K	5%	1/4W	F

< VARIABLE RESISTOR >

Ref. No.	Part No.	Description
RV51	1-241-631-21	RES, ADJ, CARBON 22K

< TRANSFORMER >

Ref. No.	Part No.	Description
T1	1-402-424-11	COIL (ANT, SW3) (C50:E, EA, AUS, SP, PX)
T2	1-402-960-11	COIL (OSC SW3) (C50:E, EA, AUS, SP, PX)
T51	1-236-465-11	ENCAPSULATED COMPONENT (C50:IT, G)

< TERMINAL >

Ref. No.	Part No.	Description
TB1	1-537-238-21	TERMINAL BOARD (ANTENNA) (C50:CND, E, EA, AUS, SP, PX/C50U)
TB1	1-537-488-11	TERMINAL BOARD (ANTENNA) (C50:AEP, UK, IT, G, EE)

< VIBRATOR >

Ref. No.	Part No.	Description
X21	1-577-126-21	VIBRATOR, CRYSTAL (7.2MHz)

Ref. No.	Part No.	Description				Remark
X51	1-579-777-11	DISCRIMINATOR, CERAMIC (10.7MHz)				
X52	1-577-075-11	OSCILLATOR, CERAMIC (456kHz)				

****

* A-2006-399-A MD-A BOARD COMPLETE (C50)
****

< CAPACITOR >

C11	1-163-131-00	CERAMIC CHIP	390PF	5%	50V
C12	1-136-157-00	FILM	0.022uF	5%	50V
C13	1-124-234-00	ELECT	22uF	20%	16V
C18	1-163-117-00	CERAMIC CHIP	100PF	5%	50V
C21	1-163-131-00	CERAMIC CHIP	390PF	5%	50V
C22	1-136-157-00	FILM	0.022uF	5%	50V
C23	1-124-234-00	ELECT	22uF	20%	16V
C28	1-163-117-00	CERAMIC CHIP	100PF	5%	50V
C31	1-124-234-00	ELECT	22uF	20%	16V
C32	1-124-234-00	ELECT	22uF	20%	16V
C72	1-124-499-11	ELECT, NONPOLAR	1uF	20%	50V

< CONNECTOR >

* CNJ31	1-580-782-11	CONNECTOR, BOARD TO BOARD 10P
* CNJ72	1-580-411-11	SOCKET, CONNECTOR 4P
* CNP32	1-580-772-11	PIN, CONNECTOR (PC BOARD) 4P
* CNP71	1-564-719-11	PIN, CONNECTOR (SMALL TYPE) 3P

< HEAD >

HP101	A-2003-837-F	DECK ASSY, HEAD (DECK A)

< IC >

IC31A	8-759-106-02	IC uPC4570G2

< JUMPER RESISTOR >

JW1	1-216-295-00	METAL CHIP	0	5%	1/10W
JW51	1-216-296-00	METAL CHIP	0	5%	1/8W
JW52	1-216-296-00	METAL CHIP	0	5%	1/8W
JW53	1-216-296-00	METAL CHIP	0	5%	1/8W
JW54	1-216-296-00	METAL CHIP	0	5%	1/8W

< MOTOR >

M101A	X-3363-501-1	MOTOR, REEL ASSY (DECK A)
M102A	X-3365-377-1	MOTOR, CAPSTAN ASSY (DECK A)

< TRANSISTOR >

Q71A	8-729-602-36	TRANSISTOR 2SA1602

< RESISTOR >

R11	1-216-099-00	METAL CHIP	120K	5%	1/10W
R12	1-216-025-00	METAL CHIP	100	5%	1/10W
R13	1-216-100-00	METAL GLAZE	130K	5%	1/10W
R14	1-216-067-91	METAL GLAZE	5.6K	5%	1/10W
R21	1-216-099-00	METAL CHIP	120K	5%	1/10W
R22	1-216-025-00	METAL CHIP	100	5%	1/10W
R23	1-216-100-00	METAL GLAZE	130K	5%	1/10W
R24	1-216-067-91	METAL GLAZE	5.6K	5%	1/10W
R31	1-216-033-00	METAL CHIP	220	5%	1/10W
R32	1-216-033-00	METAL CHIP	220	5%	1/10W
R71	1-216-082-00	METAL GLAZE	24K	5%	1/10W
R72	1-216-081-00	METAL CHIP	22K	5%	1/10W
R73	1-216-089-91	METAL GLAZE	47K	5%	1/10W
R74	1-216-089-91	METAL GLAZE	47K	5%	1/10W

< VARIABLE RESISTOR >

RV11A	1-241-627-21	RES, ADJ, CARBON 1K
RV21A	1-241-627-21	RES, ADJ, CARBON 1K
RV71A	1-241-630-21	RES, ADJ, CARBON 10K
RV72A	1-241-630-21	RES, ADJ, CARBON 10K

****

* A-2006-400-A MD-B BOARD COMPLETE (C50)
****

< CAPACITOR >

C11	1-163-131-00	CERAMIC CHIP	390PF	5%	50V
C12	1-136-157-00	FILM	0.022uF	5%	50V
C13	1-124-234-00	ELECT	22uF	20%	16V
C14	1-136-273-91	FILM	75PF	5%	630V
C15	1-164-080-11	CERAMIC	390PF	10%	50V
C17	1-163-103-00	CERAMIC CHIP	27PF	5%	50V
C18	1-163-117-00	CERAMIC CHIP	100PF	5%	50V
C21	1-163-131-00	CERAMIC CHIP	390PF	5%	50V
C22	1-136-157-00	FILM	0.022uF	5%	50V
C23	1-124-234-00	ELECT	22uF	20%	16V
C24	1-136-273-91	FILM	75PF	5%	630V
C25	1-164-080-11	CERAMIC	390PF	10%	50V
C27	1-163-103-00	CERAMIC CHIP	27PF	5%	50V
C28	1-163-117-00	CERAMIC CHIP	100PF	5%	50V
C31	1-124-234-00	ELECT	22uF	20%	16V
C32	1-124-234-00	ELECT	22uF	20%	16V
C33	1-124-234-00	ELECT	22uF	20%	16V
C51	1-163-019-00	CERAMIC CHIP	0.0068uF	10%	50V
C52	1-163-019-00	CERAMIC CHIP	0.0068uF	10%	50V
C53	1-163-022-00	CERAMIC CHIP	0.012uF	10%	50V
C54	1-136-559-11	FILM	0.0047uF	5%	630V
C56	1-164-505-11	CERAMIC CHIP	2.2uF		16V
C57	1-164-346-11	CERAMIC CHIP	1uF		16V
C58	1-163-024-00	CERAMIC CHIP	0.018uF	10%	50V
C72	1-124-499-11	ELECT, NONPOLAR	1uF	20%	50V

Ref. No.	Part No.	Description				Remark
		< CONNECTOR >				
* CNJ31	1-580-782-11	CONNECTOR, BOARD TO BOARD 10P				
* CNJ33	1-580-782-11	CONNECTOR, BOARD TO BOARD 10P				
* CNJ72	1-580-411-11	SOCKET, CONNECTOR 4P				
* CNP32	1-580-781-11	PIN, CONNECTOR (PC BOARD) 7P				
* CNP71	1-564-719-11	PIN, CONNECTOR (SMALL TYPE) 3P				
		< DIODE >				
D31	8-719-016-74	DIODE 1SS352				
		< HEAD >				
HRPE101	A-2003-838-F	DECK ASSY, HEAD (DECK B)				
		< IC >				
IC31B	8-759-106-02	IC uPC4570G2				
		< JUMPER RESISTOR >				
JW1	1-216-296-00	METAL CHIP	0	5%	1/8W	
JW2	1-216-295-00	METAL CHIP	0	5%	1/10W	
JW3	1-216-295-00	METAL CHIP	0	5%	1/10W	
JW4	1-216-295-00	METAL CHIP	0	5%	1/10W	
JW6	1-216-295-00	METAL CHIP	0	5%	1/10W	
JW7	1-216-295-00	METAL CHIP	0	5%	1/10W	
JW52	1-216-296-00	METAL CHIP	0	5%	1/8W	
JW53	1-216-296-00	METAL CHIP	0	5%	1/8W	
JW54	1-216-296-00	METAL CHIP	0	5%	1/8W	
JW55	1-216-296-00	METAL CHIP	0	5%	1/8W	
JW56	1-216-296-00	METAL CHIP	0	5%	1/8W	
JW57	1-216-296-00	METAL CHIP	0	5%	1/8W	
JW58	1-216-296-00	METAL CHIP	0	5%	1/8W	
JW59	1-216-296-00	METAL CHIP	0	5%	1/8W	
JW60	1-216-296-00	METAL CHIP	0	5%	1/8W	
JW61	1-216-296-00	METAL CHIP	0	5%	1/8W	
		< COIL >				
L11	1-410-780-11	INDUCTOR	27mH			
L21	1-410-780-11	INDUCTOR	27mH			
		< MOTOR >				
M101B	X-3363-501-1	MOTOR, REEL ASSY (DECK B)				
M102B	X-3365-377-1	MOTOR, CAPSTAN ASSY (DECK B)				
		< TRANSISTOR >				
Q51	8-729-808-01	TRANSISTOR 2SD1622-S				
Q52	8-729-808-01	TRANSISTOR 2SD1622-S				
Q53	8-729-808-01	TRANSISTOR 2SD1622-S				
Q71B	8-729-602-36	TRANSISTOR 2SA1602				

Ref. No.	Part No.	Description				Remark
		< RESISTOR >				
R11	1-216-099-00	METAL CHIP	120K	5%	1/10W	
R12	1-216-025-00	METAL CHIP	100	5%	1/10W	
R13	1-216-100-00	METAL GLAZE	130K	5%	1/10W	
R14	1-216-067-91	METAL GLAZE	5.6K	5%	1/10W	
⚠R15	1-249-430-11	CARBON	12K	5%	1/4W	
R21	1-216-099-00	METAL CHIP	120K	5%	1/10W	
R22	1-216-025-00	METAL CHIP	100	5%	1/10W	
R23	1-216-100-00	METAL GLAZE	130K	5%	1/10W	
R24	1-216-067-91	METAL GLAZE	5.6K	5%	1/10W	
⚠R25	1-249-430-11	CARBON	12K	5%	1/4W	
R31	1-216-033-00	METAL CHIP	220	5%	1/10W	
R32	1-216-033-00	METAL CHIP	220	5%	1/10W	
⚠R41	1-249-393-11	CARBON	10	5%	1/4W	F
⚠R42	1-249-393-11	CARBON	10	5%	1/4W	F
R51	1-216-075-00	METAL CHIP	12K	5%	1/10W	
R52	1-216-075-00	METAL CHIP	12K	5%	1/10W	
R53	1-216-073-00	METAL CHIP	10K	5%	1/10W	
R54	1-216-309-00	METAL CHIP	5.6	5%	1/10W	
R55	1-216-309-00	METAL CHIP	5.6	5%	1/10W	
R56	1-216-298-00	METAL CHIP	2.2	5%	1/10W	
R71	1-216-082-00	METAL GLAZE	24K	5%	1/10W	
R72	1-216-081-00	METAL CHIP	22K	5%	1/10W	
R73	1-216-089-91	METAL GLAZE	47K	5%	1/10W	
R74	1-216-089-91	METAL GLAZE	47K	5%	1/10W	
		< VARIABLE RESISTOR >				
RV11B	1-241-627-21	RES, ADJ, CARBON 1K				
RV12	1-238-551-11	RES, ADJ, CARBON 220K				
RV21B	1-241-627-21	RES, ADJ, CARBON 1K				
RV22	1-238-551-11	RES, ADJ, CARBON 220K				
RV71B	1-241-630-21	RES, ADJ, CARBON 10K				
RV72B	1-241-630-21	RES, ADJ, CARBON 10K				
		< RELAY >				
RY31	1-515-913-11	RELAY				
		< TRANSFORMER >				
T51	1-406-419-11	COIL, BIAS OSCILLATION				

****

* 1-648-415-11 MIC BOARD
****
(C50:AEP, UK, IT, G, EE, E, EA, AUS, SP, PX)

Ref. No.	Part No.	Description				Remark
		< CAPACITOR >				
C831	1-162-282-31	CERAMIC	100PF	10%	50V	
C832	1-126-301-11	ELECT	1uF	20%	50V	
C833	1-162-282-31	CERAMIC	100PF	10%	50V	

The components identified by mark ⚠ or dotted line with mark ⚠ are critical for safety. Replace only with part number specified.	Les composants identifiés par une marque ⚠ sont critiques pour la sécurité. Ne les remplacer que par une piéce portant le numéro spécifié.

MIC **POWER**

Ref. No.	Part No.	Description				Remark
C834	1-162-282-31	CERAMIC	100PF	10%	50V	
C835	1-162-282-31	CERAMIC	100PF	10%	50V	
C836	1-126-301-11	ELECT	1uF	20%	50V	
C865	1-124-589-11	ELECT	47uF	20%	16V	
C866	1-124-589-11	ELECT	47uF	20%	16V	
C867	1-164-159-11	CERAMIC	0.1uF		50V	
		< CONNECTOR >				
* CN831	1-564-519-11	PLUG, CONNECTOR 4P				
		< IC >				
IC831	8-759-634-50	IC M5218AL				
		< JACK >				
J831	1-750-032-11	JACK (DIA. 3.5)(MIC)				
		< RESISTOR >				
R831	1-249-429-11	CARBON	10K	5%	1/4W	
R833	1-249-412-11	CARBON	390	5%	1/4W	F
R834	1-249-441-11	CARBON	100K	5%	1/4W	
R835	1-249-441-11	CARBON	100K	5%	1/4W	
R854	1-249-409-11	CARBON	220	5%	1/4W	F
R855	1-249-409-11	CARBON	220	5%	1/4W	F
R856	1-249-417-11	CARBON	1K	5%	1/4W	F
		< VARIABLE RESISTOR >				
RV831	1-223-434-11	RES, VAR, CARBON 50K (MIC LEVEL)				

****

Ref. No.	Part No.	Description				Remark
*	A-4360-826-A	POWER BOARD, COMPLETE (C50U)				
		*********************				
*	A-4360-963-A	POWER BOARD, COMPLETE				
		*********************				
		(C50:AEP, UK, IT, G, EE)				
*	A-4360-975-A	POWER BOARD, COMPLETE (C50:E, EA, SP, PX)				
		*********************				
*	A-4360-979-A	POWER BOARD, COMPLETE (C50:CND)				
		*********************				
*	A-4365-709-A	POWER BOARD, COMPLETE (C50:AUS)				
		*********************				
	1-533-233-11	HOLDER, FUSE				
*	4-886-555-00	HEAT SINK				
	7-682-548-04	SCREW +BVTT 3X8 (S)				
		< CAPACITOR >				
C901	1-136-165-00	FILM	0.1uF	5%	50V	
C902	1-136-165-00	FILM	0.1uF	5%	50V	
C903	1-126-974-11	ELECT	3300uF	20%	50V	
C904	1-126-974-11	ELECT	3300uF	20%	50V	
C905	1-124-929-11	ELECT	22uF	20%	100V	
C906	1-124-929-11	ELECT	22uF	20%	100V	
C907	1-124-907-11	ELECT	10uF	20%	50V	
C911	1-124-564-11	ELECT	4700uF	20%	25V	
C912	1-124-564-11	ELECT	4700uF	20%	25V	
C913	1-136-165-00	FILM	0.1uF	5%	50V	
C914	1-136-165-00	FILM	0.1uF	5%	50V	
C915	1-124-927-11	ELECT	4.7uF	20%	100V	
C916	1-124-925-11	ELECT	2.2uF	20%	100V	
C917	1-126-927-11	ELECT	2200uF	20%	10V	
C918	1-126-927-11	ELECT	2200uF	20%	10V	
C919	1-124-604-00	ELECT	330uF	20%	10V	
C921	1-101-005-00	CERAMIC	22000PF		50V	
C922	1-124-604-00	ELECT	330uF	20%	10V	
C923	1-123-382-00	ELECT	3.3uF	20%	100V	
C941	1-124-477-11	ELECT	47uF	20%	25V	
C942	1-124-477-11	ELECT	47uF	20%	25V	
C943	1-124-477-11	ELECT	47uF	20%	25V	
C951	1-124-927-11	ELECT	4.7uF	20%	100V	
C952	1-162-294-31	CERAMIC	0.001uF	10%	50V	
C953	1-124-477-11	ELECT	47uF	20%	25V	
C954	1-162-282-31	CERAMIC	100PF	10%	50V	
C956	1-124-910-11	ELECT	47uF	20%	50V	
C957	1-124-910-11	ELECT	47uF	20%	50V	
C958	1-124-910-11	ELECT	47uF	20%	50V	
C959	1-124-910-11	ELECT	47uF	20%	50V	
C960	1-136-165-00	FILM	0.1uF	5%	50V	
C961	1-136-165-00	FILM	0.1uF	5%	50V	
C962	1-124-903-11	ELECT	1uF	20%	50V	
C971	1-124-927-11	ELECT	4.7uF	20%	100V	
C972	1-162-294-31	CERAMIC	0.001uF	10%	50V	
C973	1-124-477-11	ELECT	47uF	20%	25V	
C974	1-162-282-31	CERAMIC	100PF	10%	50V	
C976	1-124-910-11	ELECT	47uF	20%	50V	
C979	1-124-910-11	ELECT	47uF	20%	50V	
C980	1-136-165-00	FILM	0.1uF	5%	50V	
C981	1-136-165-00	FILM	0.1uF	5%	50V	
C9000	1-164-159-11	CERAMIC	0.1uF		50V	
		< CONNECTOR >				
* CN901	1-564-321-00	PIN, CONNECTOR 2P				
CN911	1-695-336-31	PIN, CONNECTOR (PC BOARD) 13P				
CN912	1-695-094-11	SOCKET, CONNECTOR 11P				
CN913	1-750-179-11	SOCKET, CONNECTOR 5P				
		< DIODE >				
D901	8-719-312-09	DIODE RBA-402				

Ref. No.	Part No.	Description	Remark
D903	8-719-200-82	DIODE 11ES2	
D904	8-719-200-82	DIODE 11ES2	
D905	8-719-934-22	DIODE HZS30-2L	
D906	8-719-014-66	DIODE UZP-5.6B	
D911	8-719-200-82	DIODE 11ES2	
D912	8-719-200-82	DIODE 11ES2	
D913	8-719-200-82	DIODE 11ES2	
D914	8-719-200-82	DIODE 11ES2	
D915	8-719-987-63	DIODE 1N4148M	
D920	8-719-200-82	DIODE 11ES2	
D921	8-719-815-85	DIODE 1S1585	
D922	8-719-987-63	DIODE 1N4148M	
D923	8-719-987-63	DIODE 1N4148M	
D924	8-719-987-63	DIODE 1N4148M	
D941	8-719-001-70	DIODE UZL-12M1	
D942	8-719-815-85	DIODE 1S1585	
D943	8-719-933-33	DIODE HZS6A1L	
		< FUSE >	
⚠F901	1-532-078-00	FUSE T1A (C50:E, EA, AUS, SP, PX)	
⚠F901	1-532-215-00	FUSE T800mA (C50:AEP, UK, IT, G, EE)	
⚠F901	1-576-103-11	FUSE 1.6A (C50:CND/C50U)	
⚠F902	1-532-279-00	FUSE T500mA (C50:E, EA, SP, PX)	
⚠F911	1-532-203-00	FUSE T2A (C50:AEP, UK, IT, G, EE, E, EA, AUS, SP, PX)	
⚠F911	1-576-104-11	FUSE 2A (C50:CND/C50U)	
⚠F912	1-532-203-00	FUSE T2A (C50:AEP, UK, IT, G, EE, E, EA, AUS, SP, PX)	
⚠F912	1-576-104-11	FUSE 2A (C50:CND/C50U)	
		< IC >	
IC911	8-759-602-66	IC M5230L-A	
IC921	8-759-604-35	IC M5F78M05L	
IC951	8-749-900-96	IC STK-4142MK2 (C50:AEP, UK, IT, G, EE)	
IC951	8-749-920-13	IC STK-4132MK2 (C50:CND, E, EA, AUS, SP, PX/C50U)	
		< COIL >	
⚠L901	1-424-485-11	FILTER, LINE (C50:AEP, UK, IT, G, EE)	
		< TRANSISTOR >	
Q901	8-729-141-83	TRANSISTOR 2SA473	
Q913	8-729-620-05	TRANSISTOR 2SC2603-EF	
Q922	8-729-900-36	TRANSISTOR DTC124ES	
Q923	8-729-900-63	TRANSISTOR DTA124ES	
Q924	8-729-900-36	TRANSISTOR DTC124ES	
Q925	8-729-900-63	TRANSISTOR DTA124ES	
Q926	8-729-900-36	TRANSISTOR DTC124ES	
Q941	8-729-209-15	TRANSISTOR 2SD2012	
Q942	8-729-900-36	TRANSISTOR DTC124ES	

Ref. No.	Part No.	Description	Remark
		< TRANSFORMER >	
⚠T901	1-423-710-11	TRANSFORMER, POWER (C50U)	
⚠T901	1-423-711-11	TRANSFORMER, POWER (C50:AEP, IT, G, EE)	
⚠T901	1-423-712-11	TRANSFORMER, POWER (C50:UK)	
⚠T901	1-423-713-11	TRANSFORMER, POWER (C50:E, EA, AUS, PX)	
⚠T901	1-423-752-11	TRANSFORMER, POWER (C50:SP)	
⚠T901	1-423-753-11	TRANSFORMER, POWER (C50:CND)	
		< RESISTOR >	
⚠R901	1-202-725-00	SOLID 3.3M 10% 1/2W (C50:CND/C50U)	
R903	1-212-897-00	FUSIBLE 470 5% 1/4W	F
R904	1-249-426-11	CARBON 5.6K 5% 1/4W	
R910	1-247-903-00	CARBON 1M 5% 1/4W	
R911	1-249-409-11	CARBON 220 5% 1/4W	F
R912	1-249-409-11	CARBON 220 5% 1/4W	F
R913	1-249-433-11	CARBON 22K 5% 1/4W	
R914	1-249-414-11	CARBON 560 5% 1/4W	F
R915	1-249-414-11	CARBON 560 5% 1/4W	F
R916	1-249-431-11	CARBON 15K 5% 1/4W	
R917	1-249-431-11	CARBON 15K 5% 1/4W	
R918	1-249-429-11	CARBON 10K 5% 1/4W	
R919	1-249-423-11	CARBON 3.3K 5% 1/4W	F
R920	1-249-429-11	CARBON 10K 5% 1/4W	
R923	1-249-419-11	CARBON 1.5K 5% 1/4W	F
R924	1-249-429-11	CARBON 10K 5% 1/4W	
R925	1-249-429-11	CARBON 10K 5% 1/4W	
R926	1-249-429-11	CARBON 10K 5% 1/4W	
⚠R941	1-212-986-91	FUSIBLE 150 5% 1/2W	F
R942	1-249-425-11	CARBON 4.7K 5% 1/4W	F
R943	1-249-425-11	CARBON 4.7K 5% 1/4W	F
R951	1-249-417-11	CARBON 1K 5% 1/4W	F
R952	1-249-438-11	CARBON 56K 5% 1/4W	
R953	1-249-418-11	CARBON 1.2K 5% 1/4W	F
R954	1-249-438-11	CARBON 56K 5% 1/4W	
R955	1-249-421-11	CARBON 2.2K 5% 1/4W	F
R956	1-249-421-11	CARBON 2.2K 5% 1/4W	F
⚠R957	1-212-881-11	FUSIBLE 100 5% 1/4W	F
⚠R958	1-212-881-11	FUSIBLE 100 5% 1/4W	F
R959	1-260-099-11	CARBON 1K 5% 1/2W	
R960	1-260-099-11	CARBON 1K 5% 1/2W	
⚠R961	1-212-849-00	FUSIBLE 4.7 5% 1/4W	F
R962	1-260-076-11	CARBON 10 5% 1/2W	
⚠R965	1-212-881-11	FUSIBLE 100 5% 1/4W	F
R971	1-249-417-11	CARBON 1K 5% 1/4W	F
R972	1-249-438-11	CARBON 56K 5% 1/4W	
R973	1-249-418-11	CARBON 1.2K 5% 1/4W	F
R974	1-249-438-11	CARBON 56K 5% 1/4W	
R975	1-249-421-11	CARBON 2.2K 5% 1/4W	F
R976	1-249-421-11	CARBON 2.2K 5% 1/4W	F

The components identified by mark ⚠ or dotted line with mark ⚠ are critical for safety. Replace only with part number specified.	Les composants identifiés par une marque ⚠ sont critiques pour la sécurité. Ne les remplacer que par une pièce portant le numéro spécifié.

Ref. No.	Part No.	Description	Remark
R978	1-247-883-00	CARBON 150K 5% 1/4W	
R980	1-249-429-11	CARBON 10K 5% 1/4W	
R982	1-260-076-11	CARBON 10 5% 1/2W	
R985	1-249-417-11	CARBON 1K 5% 1/4W	F
R9000	1-249-429-11	CARBON 10K 5% 1/4W	
		< SWITCH >	
⚠S901	1-572-675-11	SWITCH, POWER VOLTAGE CHANGE (VOLTAGE SELECTOR) (C50:E, EA, SP, PX)	
**			
*	1-648-413-11	SP.TM BOARD ***********	
		< CAPACITOR >	
C963	1-164-098-11	CERAMIC 0.047uF 12V (C50:IT, G)	
C983	1-164-098-11	CERAMIC 0.047uF 12V (C50:IT, G)	
		< RESISTOR >	
R963	1-260-076-11	CARBON 10 5% 1/2W (C50:IT, G)	
R983	1-260-076-11	CARBON 10 5% 1/2W (C50:IT, G)	
		< TERMINAL >	
* TB951	1-537-240-21	TERMINAL BOARD (CHECKER PIN) (SPEAKER)	
**			
*	1-648-414-11	SW BOARD (C50:AEP, UK, IT, G, EE) *****************************	
		< CONNECTOR >	
* CN711	1-564-518-11	PLUG, CONNECTOR 3P	
		< RESISTOR >	
R707	1-249-425-11	CARBON 4.7K 5% 1/4W	F
		< SWITCH >	
S701	1-554-650-00	SWITCH, SLIDE (INPUT SELECTOR)	
**			
*	1-634-841-14	SW-A BOARD (RA12A) (C50) **********************	
		< CONNECTOR >	
* CNP81	1-568-852-11	SOCKET, CONNECTOR 9P	
		< IC >	
IC81A	8-749-924-10	IC PHONT REFLECTOR NJL5165K-B(H1)	
		< RESISTOR >	
R84	1-249-417-11	CARBON 1K 5% 1/4W	F
R85	1-249-408-11	CARBON 180 5% 1/4W	F
		< SWITCH >	
S81A	1-571-958-11	SWITCH, PUSH (1 KEY) (STOP DET)	
S82A	1-571-281-21	SWITCH, LEAF (Cr02 DET)	
S86A	1-571-281-21	SWITCH, LEAF (HALF DET)	
**			
*	1-634-841-14	SW-B BOARD (RB22A) (C50) **********************	
		< CONNECTOR >	
* CNP81	1-568-852-11	SOCKET, CONNECTOR 9P	
		< IC >	
IC81B	8-749-924-10	IC PHONT REFLECTOR NJL5165K-B(H1)	
		< RESISTOR >	
R81	1-249-414-11	CARBON 560 5% 1/4W	F
R82	1-247-818-11	CARBON 300 5% 1/4W	
R83	1-247-834-11	CARBON 1.3K 5% 1/4W	
R84	1-249-417-11	CARBON 1K 5% 1/4W	F
R85	1-249-408-11	CARBON 180 5% 1/4W	F
		< SWITCH >	
S81B	1-571-958-11	SWITCH, PUSH (1 KEY) (STO DET)	
S82B	1-571-281-21	SWITCH, LEAF (Cr02 DET)	
S83	1-571-281-21	SWITCH, LEAF (METAL DET)	
S84	1-571-281-21	SWITCH, LEAF (ERASE PROOF, SIDE A)	
S85	1-571-281-21	SWITCH, LEAF (ERASE PROOF, SIDE B)	
S86B	1-571-281-21	SWITCH, LEAF (HALF DET)	
**			
*	A-4360-972-A	TC MAIN BOARD, COMPLETE (C50) ****************************	
		< CAPACITOR >	
C201	1-130-479-00	MYLAR 0.0047uF 5% 50V	
C202	1-162-291-31	CERAMIC 560PF 10% 50V	
C203	1-136-165-00	FILM 0.1uF 5% 50V	
C204	1-124-907-11	ELECT 10uF 20% 50V	
C205	1-124-903-11	ELECT 1uF 20% 50V	
C206	1-124-902-00	ELECT 0.47uF 20% 50V	

The components identified by mark ⚠ or dotted line with mark ⚠ are critical for safety. Replace only with part number specified.	Les composants identifiés par une marque ⚠ sont critiques pour la sécurité. Ne les remplacer que par une piéce portant le numéro spécifié.

Ref. No.	Part No.	Description			Remark
C207	1-124-907-11	ELECT	10uF	20%	50V
C208	1-161-377-00	CERAMIC	0.0047uF	20%	16V
C209	1-161-375-00	CERAMIC	0.0022uF	20%	50V
C210	1-124-902-00	ELECT	0.47uF	20%	50V
C211	1-124-903-11	ELECT	1uF	20%	50V
C212	1-124-907-11	ELECT	10uF	20%	50V
C240	1-124-907-11	ELECT	10uF	20%	50V
C241	1-124-907-11	ELECT	10uF	20%	50V
C242	1-124-122-11	ELECT	100uF	20%	50V
C243	1-124-122-11	ELECT	100uF	20%	50V
C244	1-124-443-00	ELECT	100uF	20%	10V
C245	1-124-471-00	ELECT	1000uF	20%	6.3V
C246	1-126-101-11	ELECT	100uF	20%	16V
C247	1-126-101-11	ELECT	100uF	20%	16V
C248	1-126-101-11	ELECT	100uF	20%	16V
C260	1-126-157-11	ELECT	10uF	20%	16V
C261	1-124-907-11	ELECT	10uF	20%	50V
C270	1-162-306-11	CERAMIC	0.01uF	20%	16V
C271	1-162-290-31	CERAMIC	470PF	10%	50V
C272	1-162-290-31	CERAMIC	470PF	10%	50V
C273	1-164-159-11	CERAMIC	0.1uF		50V
C274	1-164-159-11	CERAMIC	0.1uF		50V
C275	1-162-306-11	CERAMIC	0.01uF	20%	16V
C291	1-164-159-11	CERAMIC	0.1uF		50V
C292	1-126-096-11	ELECT	10uF	20%	35V
C293	1-162-282-31	CERAMIC	100PF	10%	50V
C294	1-162-282-31	CERAMIC	100PF	10%	50V
C295	1-124-925-11	ELECT	2.2uF	20%	100V
C301	1-130-479-00	MYLAR	0.0047uF	5%	50V
C302	1-162-291-31	CERAMIC	560PF	10%	50V
C303	1-136-165-00	FILM	0.1uF	5%	50V
C304	1-126-096-11	ELECT	10uF	20%	35V
C305	1-124-903-11	ELECT	1uF	20%	50V
C306	1-124-465-00	ELECT	0.47uF	20%	50V
C307	1-126-096-11	ELECT	10uF	20%	35V
C308	1-124-907-11	ELECT	10uF	20%	50V
C309	1-164-159-11	CERAMIC	0.1uF		50V
C311	1-124-903-11	ELECT	1uF	20%	50V
C312	1-124-907-11	ELECT	10uF	20%	50V
		< CONNECTOR >			
CN200	1-750-418-11	CONNECTOR, FFC/FPC 13P			
CN202	1-580-783-11	CONNECTOR, BOARD TO BOARD 10P			
CN203	1-580-783-11	CONNECTOR, BOARD TO BOARD 10P			
CN204	1-580-783-11	CONNECTOR, BOARD TO BOARD 10P			
CN205	1-750-414-11	CONNECTOR, FFC/FPC 9P			
CN206	1-750-414-11	CONNECTOR, FFC/FPC 9P			
CN207	1-750-420-11	CONNECTOR, FFC/FPC 15P			
* CN208	1-564-522-11	PLUG, CONNECTOR 7P			
* CN354	1-564-518-11	PLUG, CONNECTOR 3P			

Ref. No.	Part No.	Description				Remark
		< DIODE >				
D201	8-719-987-63	DIODE 1N4148M				
D202	8-719-987-63	DIODE 1N4148M				
D203	8-719-987-63	DIODE 1N4148M				
D204	8-719-200-82	DIODE 11ES2				
D205	8-719-200-82	DIODE 11ES2				
D206	8-719-200-82	DIODE 11ES2				
D207	8-719-987-63	DIODE 1N4148M				
D208	8-719-987-63	DIODE 1N4148M				
		< IC >				
IC201	8-759-098-75	IC HA12171NT				
IC202	8-759-099-08	IC M50964-260FP				
IC203	8-759-520-90	IC PST572E				
IC204	8-759-207-05	IC TA7272P				
		< COIL >				
L201	1-408-080-00	INDUCTOR	100uH			
L202	1-408-080-00	INDUCTOR	100uH			
		< TRANSISTOR >				
Q201	8-729-119-78	TRANSISTOR 2SC2785-HFE				
Q210	8-729-900-65	TRANSISTOR DTA144ES				
Q211	8-729-900-65	TRANSISTOR DTA144ES				
Q212	8-729-900-65	TRANSISTOR DTA144ES				
Q213	8-729-900-65	TRANSISTOR DTA144ES				
Q214	8-729-900-65	TRANSISTOR DTA144ES				
Q215	8-729-900-65	TRANSISTOR DTA144ES				
Q216	8-729-900-89	TRANSISTOR DTC144ES				
Q217	8-729-900-89	TRANSISTOR DTC144ES				
Q218	8-729-900-65	TRANSISTOR DTA144ES				
Q219	8-729-119-78	TRANSISTOR 2SC2785-HFE				
Q220	8-729-119-78	TRANSISTOR 2SC2785-HFE				
Q221	8-729-801-84	TRANSISTOR 2SB1013-4				
Q222	8-729-801-84	TRANSISTOR 2SB1013-4				
Q223	8-729-900-65	TRANSISTOR DTA144ES				
Q224	8-729-900-89	TRANSISTOR DTC144ES				
Q301	8-729-119-78	TRANSISTOR 2SC2785-HFE				
		< RESISTOR >				
R201	1-249-430-11	CARBON	12K	5%	1/4W	
R202	1-249-431-11	CARBON	15K	5%	1/4W	
R203	1-249-425-11	CARBON	4.7K	5%	1/4W	F
R204	1-249-428-11	CARBON	8.2K	5%	1/4W	F
R205	1-249-441-11	CARBON	100K	5%	1/4W	
R206	1-249-434-11	CARBON	27K	5%	1/4W	
R208	1-249-429-11	CARBON	10K	5%	1/4W	
R209	1-249-432-11	CARBON	18K	5%	1/4W	
R210	1-247-885-00	CARBON	180K	5%	1/4W	
R212	1-249-425-11	CARBON	4.7K	5%	1/4W	F

Ref. No.	Part No.	Description				Remark
R213	1-249-432-11	CARBON	18K	5%	1/4W	
R214	1-247-840-00	CARBON	2.4K	5%	1/4W	
R215	1-249-433-11	CARBON	22K	5%	1/4W	
R216	1-249-417-11	CARBON	1K	5%	1/4W	F
R231	1-249-429-11	CARBON	10K	5%	1/4W	
R232	1-249-425-11	CARBON	4.7K	5%	1/4W	F
R233	1-249-434-11	CARBON	27K	5%	1/4W	
R234	1-249-429-11	CARBON	10K	5%	1/4W	
R235	1-249-425-11	CARBON	4.7K	5%	1/4W	F
R236	1-249-434-11	CARBON	27K	5%	1/4W	
R241	1-249-429-11	CARBON	10K	5%	1/4W	
R242	1-247-903-00	CARBON	1M	5%	1/4W	
R243	1-247-895-00	CARBON	470K	5%	1/4W	
R244	1-247-895-00	CARBON	470K	5%	1/4W	
R245	1-249-410-11	CARBON	270	5%	1/4W	F
R246	1-249-410-11	CARBON	270	5%	1/4W	F
R248	1-249-410-11	CARBON	270	5%	1/4W	F
R249	1-249-410-11	CARBON	270	5%	1/4W	F
R251	1-249-410-11	CARBON	270	5%	1/4W	F
R252	1-249-411-11	CARBON	330	5%	1/4W	
R253	1-249-429-11	CARBON	10K	5%	1/4W	
R254	1-249-429-11	CARBON	10K	5%	1/4W	
R255	1-249-421-11	CARBON	2.2K	5%	1/4W	F
R256	1-249-421-11	CARBON	2.2K	5%	1/4W	F
R257	1-249-437-11	CARBON	47K	5%	1/4W	
R258	1-249-429-11	CARBON	10K	5%	1/4W	
R259	1-249-425-11	CARBON	4.7K	5%	1/4W	F
R260	1-249-425-11	CARBON	4.7K	5%	1/4W	F
R261	1-249-429-11	CARBON	10K	5%	1/4W	
R262	1-249-429-11	CARBON	10K	5%	1/4W	
R263	1-249-411-11	CARBON	330	5%	1/4W	
R265	1-249-411-11	CARBON	330	5%	1/4W	
R266	1-249-429-11	CARBON	10K	5%	1/4W	
R267	1-249-415-11	CARBON	680	5%	1/4W	F
R268	1-249-429-11	CARBON	10K	5%	1/4W	
R269	1-249-415-11	CARBON	680	5%	1/4W	F
R270	1-249-429-11	CARBON	10K	5%	1/4W	
R271	1-249-425-11	CARBON	4.7K	5%	1/4W	F
R272	1-249-435-11	CARBON	33K	5%	1/4W	
R273	1-249-437-11	CARBON	47K	5%	1/4W	
R274	1-247-872-11	CARBON	51K	5%	1/4W	
R275	1-247-862-11	CARBON	20K	5%	1/4W	
R276	1-247-866-11	CARBON	30K	5%	1/4W	
R277	1-247-872-11	CARBON	51K	5%	1/4W	
R278	1-249-405-11	CARBON	100	5%	1/4W	F
R279	1-249-381-11	CARBON	1	5%	1/4W	F
R280	1-249-381-11	CARBON	1	5%	1/4W	F
R281	1-249-425-11	CARBON	4.7K	5%	1/4W	F
R282	1-249-435-11	CARBON	33K	5%	1/4W	
R283	1-249-437-11	CARBON	47K	5%	1/4W	

Ref. No.	Part No.	Description				Remark
R284	1-247-872-11	CARBON	51K	5%	1/4W	
R285	1-247-862-11	CARBON	20K	5%	1/4W	
R286	1-247-866-11	CARBON	30K	5%	1/4W	
R287	1-247-872-11	CARBON	51K	5%	1/4W	
R288	1-249-405-11	CARBON	100	5%	1/4W	F
R289	1-249-381-11	CARBON	1	5%	1/4W	F
R290	1-249-381-11	CARBON	1	5%	1/4W	F
⚠R291	1-249-456-11	CARBON	5.6	5%	1/4W	
R292	1-249-441-11	CARBON	100K	5%	1/4W	
R293	1-249-405-11	CARBON	100	5%	1/4W	F
R294	1-249-405-11	CARBON	100	5%	1/4W	F
R295	1-249-417-11	CARBON	1K	5%	1/4W	F
R300	1-215-451-00	METAL	18K	1%	1/6W	
R301	1-249-430-11	CARBON	12K	5%	1/4W	
R302	1-249-431-11	CARBON	15K	5%	1/4W	
R303	1-249-425-11	CARBON	4.7K	5%	1/4W	F
R304	1-249-428-11	CARBON	8.2K	5%	1/4W	F
R305	1-249-429-11	CARBON	10K	5%	1/4W	
R306	1-249-429-11	CARBON	10K	5%	1/4W	
R307	1-249-429-11	CARBON	10K	5%	1/4W	
R308	1-249-425-11	CARBON	4.7K	5%	1/4W	F
R309	1-249-429-11	CARBON	10K	5%	1/4W	
R310	1-249-429-11	CARBON	10K	5%	1/4W	
R311	1-247-864-11	CARBON	24K	5%	1/4W	
R312	1-249-425-11	CARBON	4.7K	5%	1/4W	F
R313	1-249-432-11	CARBON	18K	5%	1/4W	
R314	1-247-840-00	CARBON	2.4K	5%	1/4W	
R315	1-249-433-11	CARBON	22K	5%	1/4W	
R316	1-249-417-11	CARBON	1K	5%	1/4W	F
R320	1-249-429-11	CARBON	10K	5%	1/4W	
R321	1-249-429-11	CARBON	10K	5%	1/4W	
R322	1-249-429-11	CARBON	10K	5%	1/4W	

< VARIABLE RESISTOR >

RV201	1-241-136-11	RES, ADJ, CARBON 10K
RV301	1-241-136-11	RES, ADJ, CARBON 10K

< VIBRATOR >

X201	1-577-358-21	VIBRATOR, CERAMIC (4MHz)

****

* A-4360-949-A TC MAIN (U) BOARD, COMPLETE (C50U)
****

< CAPACITOR >

C201	1-162-290-31	CERAMIC	470PF	10%	50V
C203	1-136-157-00	FILM	0.022uF	5%	50V
C204	1-124-282-00	ELECT	22uF	20%	25V
C205	1-124-443-00	ELECT	100uF	20%	10V
C211	1-162-290-31	CERAMIC	470PF	10%	50V

The components identified by mark ⚠ or dotted line with mark ⚠ are critical for safety. Replace only with part number specified.	Les composants identifiés par une marque ⚠ sont critiques pour la sécurité. Ne les remplacer que par une piéce portant le numéro spécifié.

Ref. No.	Part No.	Description			Remark
C213	1-136-157-00	FILM	0.022uF	5%	50V
C214	1-124-282-00	ELECT	22uF	20%	25V
C215	1-124-443-00	ELECT	100uF	20%	10V
C216	1-124-443-00	ELECT	100uF	20%	10V
C221	1-136-433-11	FILM	100PF	5%	630V
C222	1-162-284-31	CERAMIC	150PF	10%	50V
C223	1-136-439-11	FILM	330PF	5%	630V
C231	1-130-479-00	MYLAR	0.0047uF	5%	50V
C232	1-161-375-00	CERAMIC	2200PF	20%	50V
C233	1-124-903-11	ELECT	1uF	20%	50V
C234	1-124-907-11	ELECT	10uF	20%	50V
C235	1-164-159-11	CERAMIC	0.1uF		50V
C236	1-124-907-11	ELECT	10uF	20%	50V
C237	1-124-903-11	ELECT	1uF	20%	50V
C238	1-124-902-00	ELECT	0.47uF	20%	50V
C239	1-124-907-11	ELECT	10uF	20%	50V
C251	1-162-290-31	CERAMIC	470PF	10%	50V
C253	1-136-157-00	FILM	0.022uF	5%	50V
C254	1-124-282-00	ELECT	22uF	20%	25V
C255	1-124-443-00	ELECT	100uF	20%	10V
C261	1-162-290-31	CERAMIC	470PF	10%	50V
C263	1-136-157-00	FILM	0.022uF	5%	50V
C264	1-124-282-00	ELECT	22uF	20%	25V
C265	1-124-443-00	ELECT	100uF	20%	10V
C266	1-124-443-00	ELECT	100uF	20%	10V
C271	1-136-433-11	FILM	100PF	5%	630V
C272	1-162-284-31	CERAMIC	150PF	10%	50V
C273	1-136-439-11	FILM	330PF	5%	630V
C281	1-130-479-00	MYLAR	0.0047uF	5%	50V
C282	1-161-375-00	CERAMIC	2200PF	20%	50V
C283	1-124-903-11	ELECT	1uF	20%	50V
C284	1-124-907-11	ELECT	10uF	20%	50V
C285	1-164-159-11	CERAMIC	0.1uF		50V
C286	1-124-907-11	ELECT	10uF	20%	50V
C287	1-124-903-11	ELECT	1uF	20%	50V
C288	1-124-902-00	ELECT	0.47uF	20%	50V
C289	1-124-907-11	ELECT	10uF	20%	50V
C301	1-124-925-11	ELECT	2.2uF	20%	100V
C302	1-136-601-11	FILM	0.01uF	5%	630V
C303	1-130-848-00	FILM	0.0082uF	5%	100V
C304	1-136-593-11	FILM	0.0033uF	5%	100V
C305	1-136-593-11	FILM	0.0033uF	5%	100V
C306	1-124-902-00	ELECT	0.47uF	20%	50V
C307	1-124-927-11	ELECT	4.7uF	20%	100V
C308	1-136-562-11	FILM	0.0082uF	5%	630V
C310	1-124-478-11	ELECT	100uF	20%	25V
C311	1-124-478-11	ELECT	100uF	20%	25V
C312	1-124-443-00	ELECT	100uF	20%	10V
C313	1-164-159-11	CERAMIC	0.1uF		50V
C314	1-164-159-11	CERAMIC	0.1uF		50V

Ref. No.	Part No.	Description			Remark
C351	1-136-175-00	FILM	0.68uF	5%	50V
C352	1-164-159-11	CERAMIC	0.1uF		50V
C353	1-124-443-00	ELECT	100uF	20%	10V
C363	1-124-907-11	ELECT	10uF	20%	50V
C364	1-162-596-11	CERAMIC	0.022uF	10%	50V
C391	1-124-443-00	ELECT	100uF	20%	10V
C392	1-124-443-00	ELECT	100uF	20%	10V
C393	1-124-443-00	ELECT	100uF	20%	10V
C394	1-124-443-00	ELECT	100uF	20%	10V
C801	1-124-443-00	ELECT	100uF	20%	10V
C802	1-161-494-00	CERAMIC	0.022uF		25V
C803	1-124-443-00	ELECT	100uF	20%	10V
C900	1-124-907-11	ELECT	10uF	20%	50V

< CONNECTOR >

Ref. No.	Part No.	Description
CN301	1-564-506-11	PLUG, CONNECTOR 3P
* CN311	1-564-509-11	PLUG, CONNECTOR 6P
CN321	1-564-505-11	PLUG, CONNECTOR 2P
* CN351	1-564-509-11	PLUG, CONNECTOR 6P
CN352	1-750-418-11	CONNECTOR, FFC/FPC 13P
CN353	1-750-418-11	CONNECTOR, FFC/FPC 13P
* CN354	1-564-506-11	PLUG, CONNECTOR 3P
CN361	1-750-452-11	CONNECTOR, FFC/FPC 11P

< DIODE >

Ref. No.	Part No.	Description	
D351	8-719-933-54	DIODE	HZS9A2L
D362	8-719-987-63	DIODE	1N4148M
D801	8-719-200-82	DIODE	11ES2
D802	8-719-000-54	DIODE	UZL-6L3

< HEAD >

Ref. No.	Part No.	Description
HE901	1-543-673-11	HEAD, MAGNETIC (ERASE)
HP901	1-543-940-11	HEAD, MAGNETIC (PLAYBACK)
HRP901	1-543-319-11	HEAD, MAGNETIC (REC/PLAYBACK)

< IC >

Ref. No.	Part No.	Description	
IC301	8-759-111-44	IC	uPC4570C-1
IC302	8-759-111-44	IC	uPC4570C-1
IC303	8-759-079-42	IC	uPC1330HA-NA
IC304	8-759-098-73	IC	HA12172NT
IC309	8-759-520-90	IC	PST572E
IC351	8-759-822-09	IC	LB1641
IC361	8-759-175-90	IC	M37471M4-220SP

< COIL >

Ref. No.	Part No.	Description	
L201	1-410-781-11	INDUCTOR	33mH
L271	1-410-781-11	INDUCTOR	33mH
L301	1-410-521-11	INDUCTOR	100uH

TC MAIN (U)

Ref. No.	Part No.	Description				Remark
		< MOTOR >				
M901	X-3362-377-1	MOTOR (WH) ASSY (CAPSTAN)				
		< TRANSISTOR >				
Q241	8-729-620-05	TRANSISTOR	2SC2603-EF			
Q291	8-729-620-05	TRANSISTOR	2SC2603-EF			
Q301	8-729-194-57	TRANSISTOR	2SC945-P			
Q302	8-729-194-57	TRANSISTOR	2SC945-P			
Q303	8-729-194-57	TRANSISTOR	2SC945-P			
Q351	8-729-900-65	TRANSISTOR	DTA144ES			
Q352	8-729-900-89	TRANSISTOR	DTC144ES			
Q353	8-729-801-93	TRANSISTOR	2SD1387-3			
Q354	8-729-900-61	TRANSISTOR	DTA114ES			
Q355	8-729-119-76	TRANSISTOR	2SA1175-HFE			
Q356	8-729-620-05	TRANSISTOR	2SC2603-EF			
Q361	8-729-900-80	TRANSISTOR	DTC114ES			
Q365	8-729-900-80	TRANSISTOR	DTC114ES			
Q391	8-729-900-61	TRANSISTOR	DTA114ES			
Q801	8-729-801-93	TRANSISTOR	2SD1387-3			
Q901	8-729-900-61	TRANSISTOR	DTA114ES			
Q902	8-729-900-61	TRANSISTOR	DTA114ES			
Q903	8-729-900-61	TRANSISTOR	DTA114ES			
		< RESISTOR >				
R201	1-247-899-11	CARBON	680K	5%	1/4W	
R202	1-249-405-11	CARBON	100	5%	1/4W	F
R203	1-247-882-11	CARBON	130K	5%	1/4W	
R204	1-249-426-11	CARBON	5.6K	5%	1/4W	
R205	1-249-409-11	CARBON	220	5%	1/4W	F
R211	1-247-889-00	CARBON	270K	5%	1/4W	
R212	1-249-433-11	CARBON	22K	5%	1/4W	
R213	1-247-882-11	CARBON	130K	5%	1/4W	
R214	1-249-426-11	CARBON	5.6K	5%	1/4W	
R215	1-249-409-11	CARBON	220	5%	1/4W	F
R216	1-249-405-11	CARBON	100	5%	1/4W	F
R221	1-249-430-11	CARBON	12K	5%	1/4W	
R231	1-249-430-11	CARBON	12K	5%	1/4W	
R232	1-249-431-11	CARBON	15K	5%	1/4W	
R233	1-249-429-11	CARBON	10K	5%	1/4W	
R241	1-249-425-11	CARBON	4.7K	5%	1/4W	F
R242	1-249-429-11	CARBON	10K	5%	1/4W	
R243	1-249-425-11	CARBON	4.7K	5%	1/4W	F
R245	1-249-433-11	CARBON	22K	5%	1/4W	
R246	1-247-840-00	CARBON	2.4K	5%	1/4W	
R251	1-247-899-11	CARBON	680K	5%	1/4W	
R252	1-249-405-11	CARBON	100	5%	1/4W	F
R253	1-247-882-11	CARBON	130K	5%	1/4W	
R254	1-249-426-11	CARBON	5.6K	5%	1/4W	
R255	1-249-409-11	CARBON	220	5%	1/4W	F

Ref. No.	Part No.	Description				Remark
R261	1-247-889-00	CARBON	270K	5%	1/4W	
R262	1-249-433-11	CARBON	22K	5%	1/4W	
R263	1-247-882-11	CARBON	130K	5%	1/4W	
R264	1-249-426-11	CARBON	5.6K	5%	1/4W	
R265	1-249-409-11	CARBON	220	5%	1/4W	F
R266	1-249-405-11	CARBON	100	5%	1/4W	F
R271	1-249-430-11	CARBON	12K	5%	1/4W	
R281	1-249-430-11	CARBON	12K	5%	1/4W	
R282	1-249-431-11	CARBON	15K	5%	1/4W	
R283	1-249-429-11	CARBON	10K	5%	1/4W	
R291	1-249-425-11	CARBON	4.7K	5%	1/4W	F
R292	1-249-429-11	CARBON	10K	5%	1/4W	
R293	1-249-425-11	CARBON	4.7K	5%	1/4W	F
R295	1-249-433-11	CARBON	22K	5%	1/4W	
R296	1-247-840-00	CARBON	2.4K	5%	1/4W	
R301	1-249-429-11	CARBON	10K	5%	1/4W	
⚠R302	1-212-849-00	FUSIBLE	4.7	5%	1/4W	F
⚠R303	1-212-849-00	FUSIBLE	4.7	5%	1/4W	F
R304	1-249-436-11	CARBON	39K	5%	1/4W	
R305	1-249-436-11	CARBON	39K	5%	1/4W	
R310	1-247-876-11	CARBON	75K	5%	1/4W	
R311	1-249-432-11	CARBON	18K	5%	1/4W	
R312	1-249-432-11	CARBON	18K	5%	1/4W	
R313	1-249-429-11	CARBON	10K	5%	1/4W	
R314	1-249-429-11	CARBON	10K	5%	1/4W	
R315	1-249-429-11	CARBON	10K	5%	1/4W	
R316	1-249-429-11	CARBON	10K	5%	1/4W	
R317	1-249-429-11	CARBON	10K	5%	1/4W	
R318	1-249-429-11	CARBON	10K	5%	1/4W	
R319	1-249-417-11	CARBON	1K	5%	1/4W	F
R319	1-249-429-11	CARBON	10K	5%	1/4W	
R321	1-247-864-11	CARBON	24K	5%	1/4W	
R351	1-249-417-11	CARBON	1K	5%	1/4W	F
R353	1-249-414-11	CARBON	560	5%	1/4W	F
R354	1-249-425-11	CARBON	4.7K	5%	1/4W	F
R355	1-249-407-11	CARBON	150	5%	1/4W	F
R356	1-249-423-11	CARBON	3.3K	5%	1/4W	F
R358	1-249-425-11	CARBON	4.7K	5%	1/4W	F
R361	1-249-429-11	CARBON	10K	5%	1/4W	
R362	1-249-429-11	CARBON	10K	5%	1/4W	
R363	1-249-429-11	CARBON	10K	5%	1/4W	
R364	1-249-429-11	CARBON	10K	5%	1/4W	
R365	1-249-417-11	CARBON	1K	5%	1/4W	F
R366	1-249-437-11	CARBON	47K	5%	1/4W	
R367	1-249-417-11	CARBON	1K	5%	1/4W	F
R368	1-249-437-11	CARBON	47K	5%	1/4W	
R369	1-247-903-00	CARBON	1M	5%	1/4W	
R370	1-249-429-11	CARBON	10K	5%	1/4W	
R371	1-249-405-11	CARBON	100	5%	1/4W	F
R372	1-249-441-11	CARBON	100K	5%	1/4W	

The components identified by mark ⚠ or dotted line with mark ⚠ are critical for safety. Replace only with part number specified.	Les composants identifiés par une marque ⚠ sont critiques pour la sécurité. Ne les remplacer que par une piéce portant le numéro spécifié.

Ref. No.	Part No.	Description				Remark
R376	1-249-429-11	CARBON	10K	5%	1/4W	
R377	1-249-429-11	CARBON	10K	5%	1/4W	
R378	1-249-417-11	CARBON	1K	5%	1/4W	F
R379	1-249-425-11	CARBON	4.7K	5%	1/4W	F
R380	1-249-417-11	CARBON	1K	5%	1/4W	F
R381	1-249-425-11	CARBON	4.7K	5%	1/4W	F
R382	1-249-417-11	CARBON	1K	5%	1/4W	F
R383	1-249-429-11	CARBON	10K	5%	1/4W	
R384	1-249-417-11	CARBON	1K	5%	1/4W	F
R385	1-249-429-11	CARBON	10K	5%	1/4W	
R386	1-249-417-11	CARBON	1K	5%	1/4W	F
R387	1-249-429-11	CARBON	10K	5%	1/4W	
R388	1-249-429-11	CARBON	10K	5%	1/4W	
⚠R391	1-219-136-11	FUSIBLE	0.22	10%	1/4W	
⚠R392	1-219-136-11	FUSIBLE	0.22	10%	1/4W	
R399	1-249-393-11	CARBON	10	5%	1/4W	F
R801	1-249-429-11	CARBON	10K	5%	1/4W	
R802	1-249-425-11	CARBON	4.7K	5%	1/4W	F
R803	1-249-425-11	CARBON	4.7K	5%	1/4W	F
R804	1-249-413-11	CARBON	470	5%	1/4W	F

< VARIABLE RESISTOR >

Ref. No.	Part No.	Description
RV201	1-241-119-11	RES, ADJ, CARBON 1K
RV211	1-241-119-11	RES, ADJ, CARBON 1K
RV221	1-238-550-11	RES, ADJ, CARBON 100K
RV231	1-241-136-11	RES, ADJ, CARBON 10K
RV251	1-241-119-11	RES, ADJ, CARBON 1K
RV261	1-241-119-11	RES, ADJ, CARBON 1K
RV271	1-238-550-11	RES, ADJ, CARBON 100K
RV281	1-241-136-11	RES, ADJ, CARBON 10K
RV351	1-241-136-11	RES, ADJ, CARBON 10K
RV352	1-241-121-11	RES, ADJ, CARBON 4.7K

< TRANSFORMER >

Ref. No.	Part No.	Description
T301	1-433-400-11	TRANSFORMER, BIAS OSCILLATION

< VIBRATOR >

Ref. No.	Part No.	Description
X361	1-577-358-21	VIBRATOR, CERAMIC (4MHz)

****

* A-4360-973-A TC SW BOARD, COMPLETE (C50)
****

< CONNECTOR >

Ref. No.	Part No.	Description
CN307	1-691-648-11	SOCKET, CONNECTOR 15P

< DIODE >

Ref. No.	Part No.	Description	
D302	8-719-018-46	LED	SEL3510C-CD (▷)
D303	8-719-018-46	LED	SEL3510C-CD (◁)
D304	8-719-312-37	LED	SEL4225C-C (● REC)
D305	8-719-310-04	LED	SEL4925A-D (❚❚ PAUSE)
D307	8-719-018-46	LED	SEL3510C-CD (▷)
D308	8-719-018-46	LED	SEL3510C-CD (◁)
D309	8-719-312-37	LED	SEL4225C-C (CD SYNCHRO)
D311	8-719-312-37	LED	SEL4225C-C (HIGH SPEED DUBBING)

< RESISTOR >

Ref. No.	Part No.	Description				Remark
R341	1-249-407-11	CARBON	150	5%	1/4W	F
R342	1-249-409-11	CARBON	220	5%	1/4W	F
R343	1-249-415-11	CARBON	680	5%	1/4W	F
R344	1-249-417-11	CARBON	1K	5%	1/4W	F
R345	1-249-426-11	CARBON	5.6K	5%	1/4W	
R346	1-249-430-11	CARBON	12K	5%	1/4W	
R347	1-249-407-11	CARBON	150	5%	1/4W	F
R348	1-249-409-11	CARBON	220	5%	1/4W	F
R349	1-249-411-11	CARBON	330	5%	1/4W	
R350	1-249-413-11	CARBON	470	5%	1/4W	F
R351	1-249-411-11	CARBON	330	5%	1/4W	
R352	1-249-413-11	CARBON	470	5%	1/4W	F
R353	1-249-415-11	CARBON	680	5%	1/4W	F
R354	1-249-417-11	CARBON	1K	5%	1/4W	F
R355	1-249-420-11	CARBON	1.8K	5%	1/4W	F
R356	1-249-424-11	CARBON	3.9K	5%	1/4W	F

< SWITCH >

Ref. No.	Part No.	Description
S301	1-554-303-21	SWITCH, TACTILE (■)
S302	1-554-303-21	SWITCH, TACTILE (▷)
S303	1-554-303-21	SWITCH, TACTILE (◁)
S304	1-554-303-21	SWITCH, TACTILE (◀◀ AMS)
S305	1-554-303-21	SWITCH, TACTILE (▶▶ AMS)
S306	1-692-356-11	SWITCH, SLIDE (DOLBY NR)
S307	1-692-503-11	SWITCH, SLIDE (DIRECTION)
S308	1-554-303-21	SWITCH, TACTILE (■)
S309	1-554-303-21	SWITCH, TACTILE (❚❚ PAUSE)
S310	1-554-303-21	SWITCH, TACTILE (▷)
S311	1-554-303-21	SWITCH, TACTILE (◁)
S313	1-554-303-21	SWITCH, TACTILE (◀◀ AMS)
S314	1-554-303-21	SWITCH, TACTILE (▶▶ AMS)
S315	1-554-303-21	SWITCH, TACTILE (● REC)
S316	1-554-303-21	SWITCH, TACTILE (HIGH SPEED DUBBING)
S318	1-554-303-21	SWITCH, TACTILE (CD SYNCHRO)

****

* A-4360-950-A TC SW (U) BOARD, COMPLETE (C50U)
****

< CONNECTOR >

Ref. No.	Part No.	Description
CN362	1-691-646-11	SOCKET, CONNECTOR 11P

The components identified by mark ⚠ or dotted line with mark ⚠ are critical for safety. Replace only with part number specified.	Les composants identifiés par une marque ⚠ sont critiques pour la sécurité. Ne les remplacer que par une piéce portant le numéro spécifié.

Ref. No.	Part No.	Description				Remark
		< DIODE >				
D901	8-719-018-46	LED SEL3510C-CD (▷)				
D902	8-719-018-46	LED SEL3510C-CD (◁)				
D903	8-719-310-04	LED SEL4925A-D (❚❚ PAUSE)				
D904	8-719-312-37	LED SEL4225C-C (● REC)				
D905	8-719-312-37	LED SEL4225C-C (HIGH SPEED DUBBING)				
		< RESISTOR >				
R901	1-249-407-11	CARBON	150	5%	1/4W	F
R902	1-249-407-11	CARBON	150	5%	1/4W	F
R903	1-249-409-11	CARBON	220	5%	1/4W	F
R904	1-249-413-11	CARBON	470	5%	1/4W	F
R905	1-249-413-11	CARBON	470	5%	1/4W	F
R906	1-249-419-11	CARBON	1.5K	5%	1/4W	F
R907	1-249-421-11	CARBON	2.2K	5%	1/4W	F
R908	1-249-424-11	CARBON	3.9K	5%	1/4W	F
R909	1-249-426-11	CARBON	5.6K	5%	1/4W	
R910	1-249-430-11	CARBON	12K	5%	1/4W	
R911	1-249-419-11	CARBON	1.5K	5%	1/4W	F
R912	1-249-421-11	CARBON	2.2K	5%	1/4W	F
R913	1-247-854-11	CARBON	9.1K	5%	1/4W	
R914	1-249-430-11	CARBON	12K	5%	1/4W	
		< SWITCH >				
S901	1-692-356-11	SWITCH, SLIDE (DOLBY NR)				
S902	1-554-303-21	SWITCH, TACTILE (■)				
S903	1-554-303-21	SWITCH, TACTILE (▷)				
S904	1-554-303-21	SWITCH, TACTILE (◀◀ AMS)				
S905	1-554-303-21	SWITCH, TACTILE (▶▶ AMS)				
S906	1-554-303-21	SWITCH, TACTILE (● REC)				
S907	1-554-303-21	SWITCH, TACTILE (HIGH SPEED DUBBING)				
S908	1-554-303-21	SWITCH, TACTILE (■)				
S909	1-554-303-21	SWITCH, TACTILE (❚❚ PAUSE)				
S910	1-554-303-21	SWITCH, TACTILE (▷)				
S911	1-554-303-21	SWITCH, TACTILE (◀◀ AMS)				
S912	1-554-303-21	SWITCH, TACTILE (▶▶ AMS)				

****

Ref. No.	Part No.	Description
*	1-648-807-11	TRANSISTOR BOARD ****************
		< TRANSISTOR >
Q911	8-729-141-83	TRANSISTOR 2SA473
Q912	8-729-209-15	TRANSISTOR 2SD2012

****

Ref. No.	Part No.	Description				Remark
*	1-648-412-11	VR BOARD ********				
		< CAPACITOR >				
C861	1-124-477-11	ELECT	47uF	20%	25V	
		< CONNECTOR >				
CN803	1-695-092-11	SOCKET, CONNECTOR 7P				
CN804	1-564-506-11	PLUG, CONNECTOR 3P				
		< IC >				
IC861	8-759-820-62	IC LB1639				
		< RESISTOR >				
R861	1-249-425-11	CARBON	4.7K	5%	1/4W	F
R862	1-249-425-11	CARBON	4.7K	5%	1/4W	F
R863	1-249-393-11	CARBON	10	5%	1/4W	F
		< VARIABLE RESISTOR >				
RV861	1-223-487-11	RES, VAR, CARBON 100K/100K (VOLUME)				

****

MISCELLANEOUS
****

Ref. No.	Part No.	Description
14	1-534-517-00	WIRE (FLAT TYPE)(13 CORE)(C50U)
14	1-690-590-31	WIRE, FLAT TYPE (13 CORE)(C50)
⚠18	1-574-902-11	CORD, POWER (C50:E,PX)
⚠18	1-590-083-11	CORD, POWER (C50:AUS)
⚠18	1-696-169-11	CORD, POWER (AEP)(C50:AEP, IT, G, EE, EA, SP)
⚠18	1-696-570-21	CORD, POWER (C50:UK)
⚠18	1-751-586-11	CORD, POWER (C50:CND/C50U)
20	1-696-804-21	WIRE (FLAT TYPE)(19 CORE)
⚠21	1-569-008-11	ADAPTER, CONVERSION 2P (C50:EA, SP)
⚠22	1-569-007-11	ADAPTER, CONVERSION 2P (C50:E, PX)
62	1-575-784-11	WIRE (FLAT TYPE)(11 CORE)(C50U)
62	1-690-065-11	WIRE, FLAT TYPE (15 CORE)(C50)
63	1-690-319-11	WIRE, FLAT TYPE (11 CORE)
64	1-575-906-11	WIRE, FLAT TYPE (15 CORE)
69	1-696-725-11	WIRE (FLAT TYPE)(9 CORE)(C50)
71	1-590-209-11	WIRE (FLAT TYPE)(7 CORE)
167	1-638-983-11	MOTOR FLEXIBLE BOARD (C50)
378	1-452-676-11	MAGNET
⚠505	8-848-144-11	DEVICE, OPTICAL KSS-240A
506	1-575-001-11	WIRE, FLAT TYPE (12 CORE)
508	1-751-597-11	WIRE (FLAT TYPE)(22 CORE)
⚠F901	1-532-215-00	FUSE (T800mA)(C50:AEP, UK, IT, G, EE)
⚠F901	1-532-078-00	FUSE (T1A)(C50:E, EA, AUS, SP, PX)
⚠F901	1-576-103-11	FUSE (1.6A)(C50:CND/C50U)
⚠F902	1-532-279-00	FUSE (T500mA)(C50:E, EA, SP, PX)

The components identified by mark ⚠ or dotted line with mark ⚠ are critical for safety. Replace only with part number specified.	Les composants identifiés par une marque ⚠ sont critiques pour la sécurité. Ne les remplacer que par une piéce portant le numéro spécifié.

Ref. No.	Part No.	Description	Remark
⚠F911	1-532-203-00	FUSE (T2A)(C50:EXCEPT CND)	
⚠F911	1-576-104-11	FUSE (2A)(C50:CND/C50U)	
⚠F912	1-532-203-00	FUSE (T2A)(C50:EXCEPT CND)	
⚠F912	1-576-104-11	FUSE (2A)(C50:CND/C50U)	
HE901	1-543-673-11	HEAD, MAGNETIC (ERASE)(C50U)	
HP101	A-2003-837-F	DECK ASSY, HEAD (DECK A)(C50)	
HP901	1-543-940-11	HEAD, MAGNETIC (PLAYBACK)(C50U)	
HRP901	1-543-319-11	HEAD, MAGNETIC (REC/PB)(C50U)	
HRPE101	A-2003-838-F	DECK ASSY, HEAD (DECK B)(C50)	
M101	X-4917-523-3	MOTOR ASSY, DISK (SPINDLE)	
M101A	X-3363-501-1	MOTOR, REEL ASSY (DECK A)(C50)	
M101B	X-3363-501-1	MOTOR, REEL ASSY (DECK B)(C50)	
M102	X-4917-504-1	MOTOR ASSY (SLED)	
M102A	X-3365-377-1	MOTOR, CAPSTAN ASSY (DECK A)(C50)	
M102B	X-3365-377-1	MOTOR, CAPSTAN ASSY (DECK B)(C50)	
M103	A-4660-232-A	MOTOR (CDM) ASSY (LOADING)	
M104	A-4660-232-A	MOTOR (CDM) ASSY (UP/DOWN)	
M105	A-4660-232-A	MOTOR (CDM) ASSY (CLAMP)	
M901	X-3362-377-1	MOTOR (WH) ASSY (CAPSTAN)(C50U)	
M902	A-2004-188-A	MOTOR ASSY, DC (TRIGGER)(C50U)	
S101	1-572-085-11	SWITCH LEAF (LIMIT)	
S102	1-466-819-11	ENCODER, ROTARY	
⚠T901	1-423-710-11	TRANSFORMER, POWER (C50U)	
⚠T901	1-423-711-11	TRANSFORMER, POWER (C50:AEP, IT, G, EE)	
⚠T901	1-423-712-11	TRANSFORMER, POWER (C50:UK)	
⚠T901	1-423-713-11	TRANSFORMER, POWER (C50:E, EA, AUS, PX)	
⚠T901	1-423-752-11	TRANSFORMER, POWER (C50:SP)	
⚠T901	1-423-753-11	TRANSFORMER, POWER (C50:CND)	

****

ACCESSORIES & PACKING MATERIALS
****

Ref. No.	Part No.	Description	Remark
	1-467-179-11	COMMANDER, STANDARD (RM-S535) (C50:AEP, UK, IT, G, EE)	
	1-501-374-11	ANTENNA, LOOP (C50:AEP, UK, IT, G, EE)	
	1-501-594-11	ANTENNA (FM)(C50:AEP, UK, IT, G, EE)	
	3-372-531-01	SCREW (C), TRANSPORT	
*	3-703-079-21	LABEL (BACK), SUB CAUTION (C50:UK)	
	3-703-710-41	STICKER, SONY SYMBOL (12)	
*	3-704-350-01	SHEET (STANDARD), PROTECTION	
	3-757-339-11	MANUAL, INSTRUCTION (ENGLISH) (C50:AEP, UK, EE)	
	3-757-339-41	MANUAL, INSTRUCTION (FRENCH, SPANISH, PORTUGUESE, DUTCH, SWEDISH)(C50:AEP)	
	3-757-339-51	MANUAL, INSTRUCTION (GERMAN, ITALIAN) (C50:AEP, IT, G)	
	3-757-339-61	MANUAL, INSTRUCTION (RUSSIAN, POLISH) (C50:EE)	
	3-757-339-71	MANUAL, INSTRUCTION (DANISH, FINNISH) (C50:EE)	
	3-757-461-11	INSTRUCTION (CAUTION)	
	4-941-762-11	COVER (MLY), BATTERY (COMMANDER) (C50:AEP, UK, IT, G, EE)	
*	4-961-658-01	CUSHION (L)	
*	4-961-659-01	CUSHION (R)	
*	4-961-663-01	INDIVIDUAL CARTON (C50:AEP, UK, IT, G, EE)	

****

****
HARDWARE LIST
****

Ref. No.	Part No.	Description
#1	7-621-255-15	SCREW +P 2X3
#2	7-682-548-09	SCREW +BVTT 3X8 (S)
#3	7-685-647-79	SCREW +BVTP 3X10 TYPE2 N-S
#4	7-685-650-79	SCREW +BVTP 3X16 TYPE2 IT-3
#5	7-685-870-01	SCREW +BVTT 3X5 (S)
#6	7-621-775-00	SCREW +B 2.6X3
#7	7-627-556-08	SCREW +P 2.6X2.8 (C50)
#8	7-621-255-25	SCREW +BVTT 2X4 (S)(C50U)
#9	7-623-921-01	RING, RETAINING, CAPSTAN (C50U)
#10	7-621-770-67	SCREW +BVTT 2.6X6 (S)(C50U)
#11	7-621-775-10	SCREW +B 2.6X4 (C50U)
#12	7-621-770-XX	SCREW +PTT 2.6X8 (S)
#13	7-621-772-48	SCREW +B 2X8 (C50U)
#14	7-682-547-09	SCREW +BVTT 3X6 (S)
#15	7-682-546-09	SCREW +PTT 3X5 (S)
#16	7-685-645-79	SCREW +BTP 3X6 TYPE2 N-S
#17	7-621-773-95	SCREW +BVTT 2.6X6 (S)
#18	7-685-131-19	SCREW +BTP 2.6X4 TYPE2 N-S
#19	7-685-134-19	SCREW +BTP 2.6X8 TYPE2 N-S
#20	7-621-773-93	SCREW (PANEL 2.6 TP2)
#21	7-682-548-04	SCREW +BVTT 3X8 (S)
#22	7-685-533-19	SCREW +BTP 2.6X6 TYPE2 N-S
#23	7-621-255-35	SCREW +BVTT 2X5 (S)

The components identified by mark ⚠ or dotted line with mark ⚠ are critical for safety. Replace only with part number specified.	Les composants identifiés par une marque ⚠ sont critiques pour la sécurité. Ne les remplacer que par une piéce portant le numéro spécifié.

9-959-086-11
(Including 9-959-086-91)

Sony Corporation
Audio Group

English
93G09101-1
Printed in Japan
© 1993.7
Published by Audio Sector Quality Assurance Dept.